SIEMENS

Data sheet 3NE8003-1

Figure similar

SITOR fuse link, with blade contacts, NH00, In: 35 A, gR, Un AC: 690 V, Un DC: 440 V, front indicator

Model	
product brand name	SENTRON
product designation	SITOR fuse link
design of the product	with blade contacts without slots
design of an identification indicator	front indicator
design of the switching contact	with blade contacts for mounting in LV HRC fuse bases or switch disconnectors
design of the fuse link	SITOR, LV HRC design
General technical data	
size of fuse system according to EN 60269-1	NH00
operating class of the fuse link	gR
varying load factor (WL)	0.95
type of voltage of the operating voltage	AC/DC
operating voltage at AC according to UL rated value	690 V
Supply voltage	
supply voltage	
● at AC	690 V
● at DC	440 V
Breaking Capacity	
switching capacity current	
● according to IEC 60947-2 rated value	100 kA
Dissipation	
power loss [W]	9 W
power loss [W]	
● **for rated value of the current at AC in hot operating state per pole**	9 W
● **maximum**	9 W
Product details	
product description	with blade contacts, silver-plated
accessories included	no
Mechanical Design	
mounting position	Any, preferably vertical
Net Weight	190.293 g
Environmental conditions	
ambient temperature during operation	
● minimum	-20 °C
● maximum	50 °C
environmental category	-20 to +50 at 95% relative humidity
Approvals Certificates	

Subject to change without notice
© Copyright Siemens

Environment			General Product Approval		
Environmental Confirmations	EPD	Environmental Confirmations	CCC	cULus	EAC

General Product Approval			Test Certificates	other	
Confirmation	CE EG-Konf.	UK CA	Special Test Certificate	Miscellaneous	Confirmation

other
产品合格 QC PASS

Further information

Information on the packaging
https://support.industry.siemens.com/cs/ww/en/view/109813875
Information for data generation and storage
https://support.industry.siemens.com/cs/ww/en/view/109995012
Information- and Downloadcenter (Catalogs, Brochures,…)
https://www.siemens.com/lowvoltage/catalogs
Industry Mall (Online ordering system)
https://mall.industry.siemens.com/mall/en/en/Catalog/product?mlfb=3NE8003-1
Service&Support (Manuals, Certificates, Characteristics, FAQs,...)
https://support.industry.siemens.com/cs/ww/en/ps/3NE8003-1
Image database (product images, 2D dimension drawings, 3D models, device circuit diagrams, ...)
https://www.automation.siemens.com/bilddb/cax_en.aspx?mlfb=3NE8003-1
CAx-Online-Generator
https://www.siemens.com/cax
Tender specifications
https://www.siemens.com/specifications
Kennlinien
https://curves.simaris.siemens.com/curves/3NE8003-1

Subject to change without notice
© Copyright Siemens

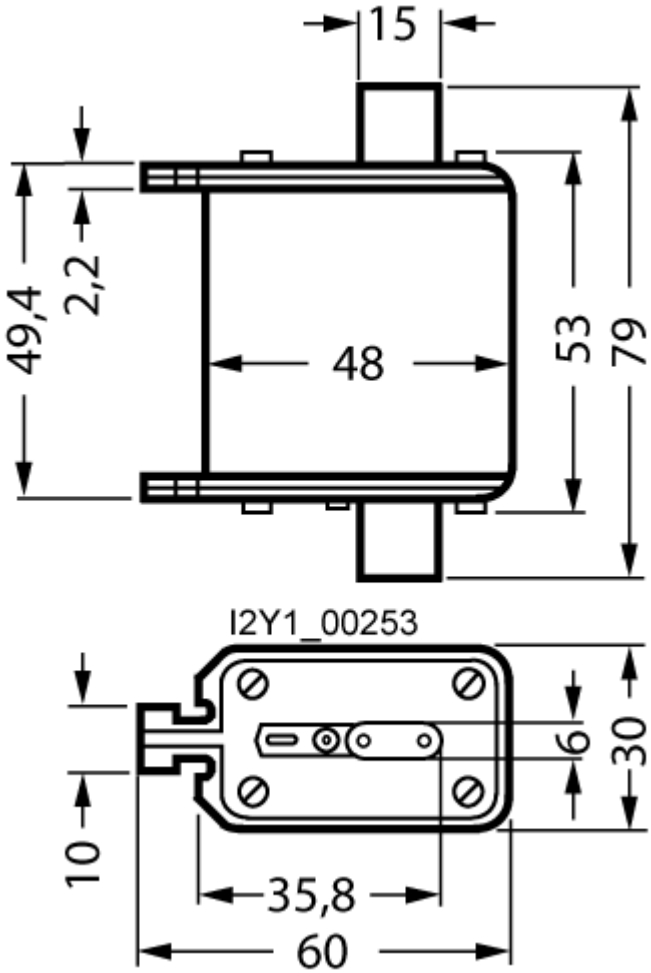

last modified: 4/11/2025

Subject to change without notice
© Copyright Siemens

Subject to change without notice
© Copyright Siemens