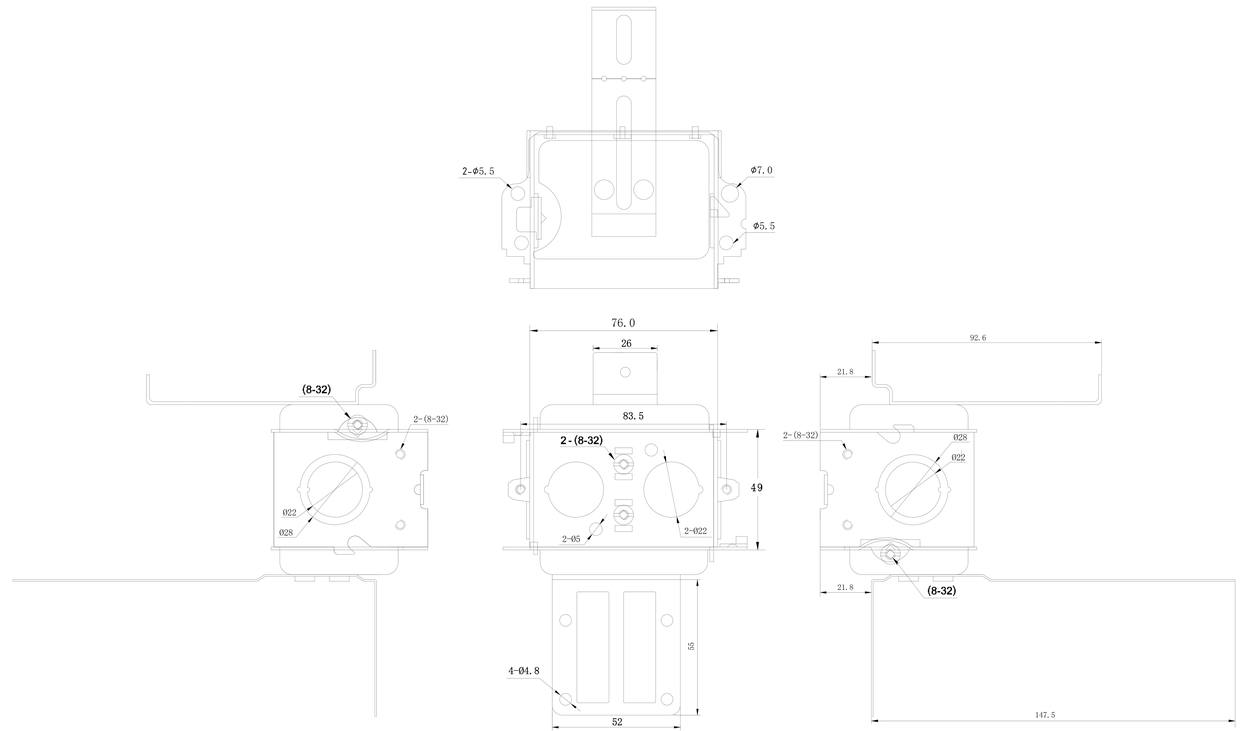


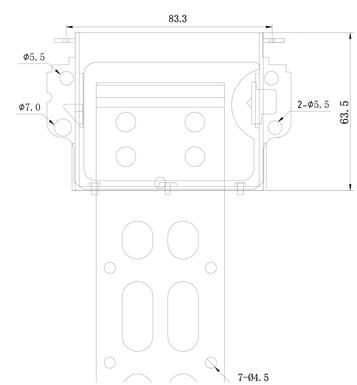


## Technical Requirement:

1. Material : Pre-galvanized Steel G20
2. Minimum Thickness : 1.3mm(-0.03mm +0.00mm)
3. Measurement : mm
4. Certification : cETL

HUBBELL® tradeSELECT™

HUBBELL CANADA ULC
870 Brock Road
Pickering, Ontario
Canada L1W 1Z8

| | | | | | |
|---|---|---|---|---|---|
| GEN. TOLERANCES | X.XX = ±0.20mm<br>X.X = ±0.50mm<br>X. = ±0.80mm | X.X = ±0.5°<br>X. = ±1° | | | |
| Designer | | Item No.: | H3104MSB1BAR | PE | |
| Date | 7/25/2025 | CHECKED BY | | SCALE | 1:1 |
| Page | 1 | APPROVED BY | | | |