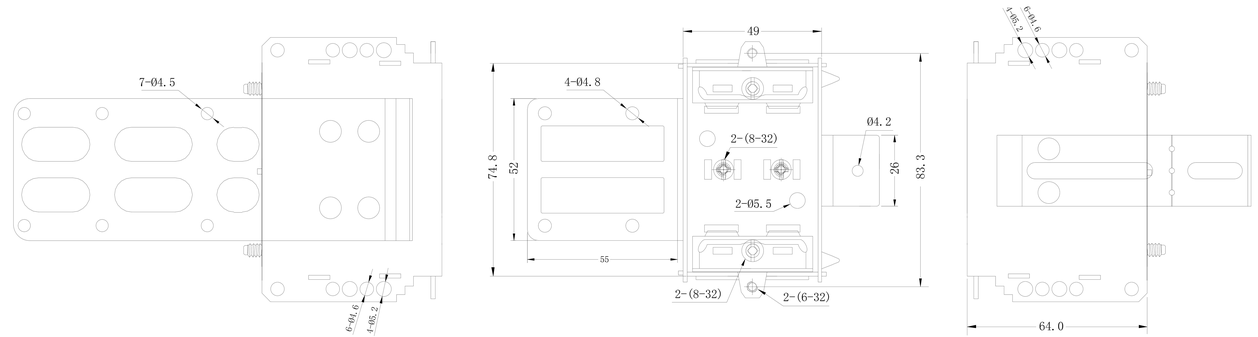

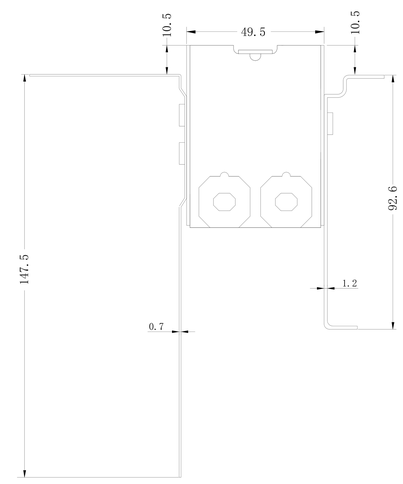

Technical Requirement:

1. Material : Pre-galvanized Steel G20
2. Minimum Thickness : 1.3mm(-0.04mm +0.00mm)
3. Measurement : mm
4. Certification : cETL

HUBBELL

tradeSELECT™

HUBBELL CANADA ULC
870 Brock Road
Pickering, Ontario
Canada L1W 1Z8

GEN. TOLERANCES		X.XX = ±0.20mm X.X = ±0.50mm X. = ±0.80mm	X.X = ±0.5° X. = ±1°		
Designer		Item No.:	H2104MSBUBAR	PE	
Date	16/12/2025	CHECKED BY		SCALE	1:1
Page	1	APPROVED BY			