STA4A-4141A024SEM4AS1 (Order no. 105305)

Safety switch STA ASi, plug connector M12

- AS-Interface
- Plug connector M12, 4-pin
- Auxiliary release
- Open-circuit current principle

Approach direction

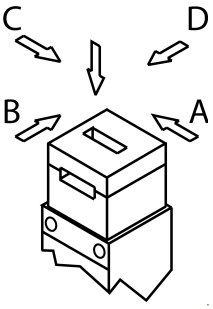

Horizontal and vertical
Can be adjusted in 90° steps
Increased overtravel for horizontal approach direction
If increased play is required when the door is closed, an actuator with overtravel is available. With this actuator the door can move slightly in the actuating direction when closed. This is important, for example, if safety doors have a rubber end stop. Using an actuator with overtravel, the continuous pressure from the compressed rubber can be reduced. In this way the load is reduced on the switch head and the door mechanism.

Guard locking principle

Open-circuit current (power on to lock): On a guard with guard locking based on the open-circuit current principle, the guard is locked until the power supply to the guard locking solenoid is interrupted. Unlocking is by spring force. The term electrical guard locking is also used.

Control of the guard locking solenoid

The guard locking solenoid is controlled via AS-Interface bit D0.

Auxiliary voltage

The ASi auxiliary voltage is required to supply the guard locking solenoid.

AS-Interface inputs

D0, D1 Monitoring of the guard position

D2, D3 Guard lock monitoring

AS-Interface outputs

D0 Control of guard locking

D1 LED red

D2 LED green

LED indicator

The Power LED indicates the operating voltage on the bus.
The Fault LED indicates if a fault has been detected on the AS-Interface bus.
The green and the red LEDs can be controlled as required by the control system via the bus using bits D1 and D2.

Auxiliary release

The auxiliary release on the front makes it possible to access the machine if there is a malfunction, e.g. a power failure. Unlocking is performed using a tool or a key. The auxiliary release must be protected against misuse (sealing, lacquer).

Accessories required

Actuator is not included.

Dimensional drawings

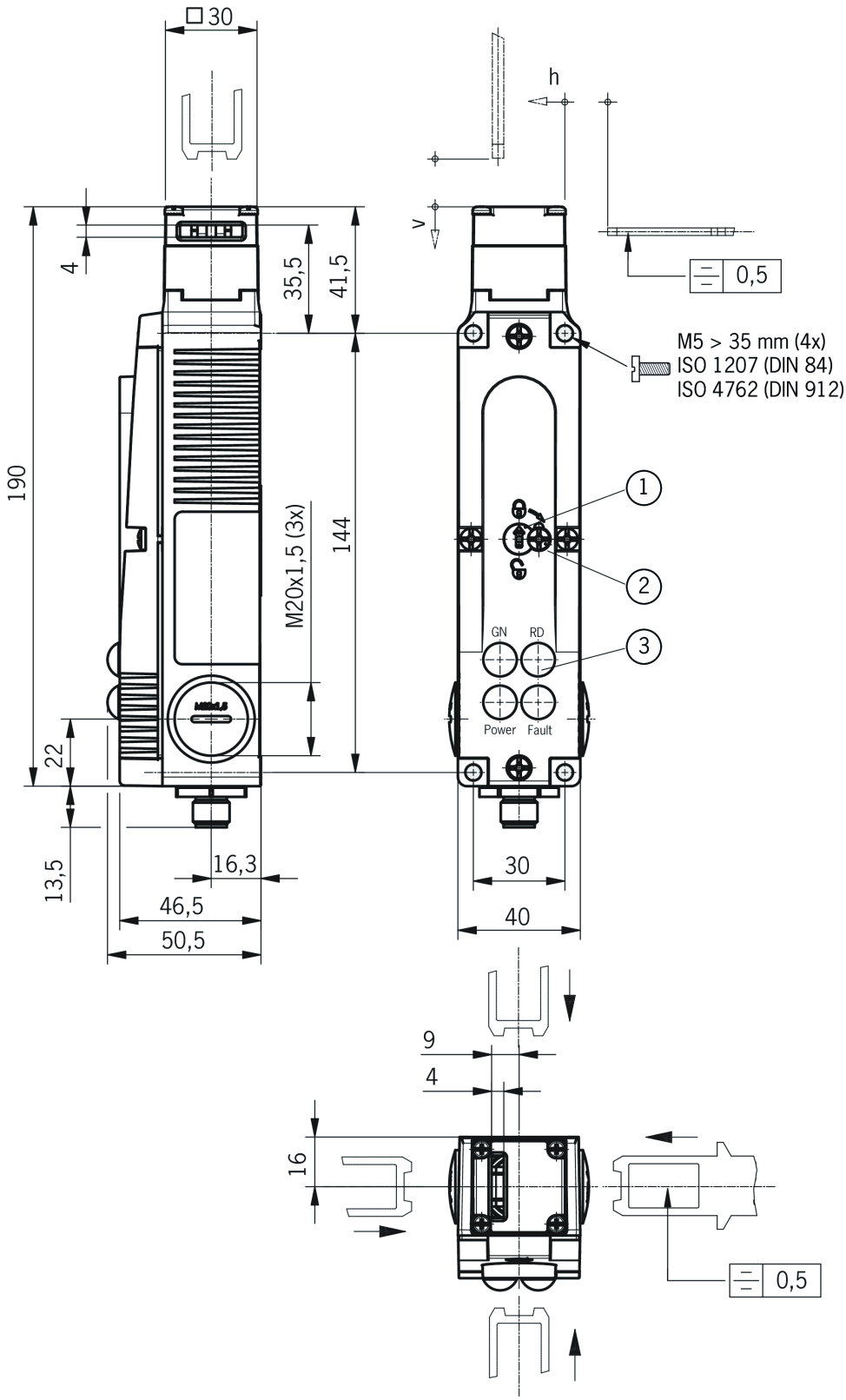

1 Auxiliary release

2 Locking screw

3 LED indicator