MGB2-L1-MLI-U-YA4A4-BA-L-157241 (Order no. 157241)

Locking module MGB2-L1-MLI... (module with 2 blanking covers, closed-circuit current principle, door hinge on left)

- Guard locking for the protection of persons or processes
- Locking module MGB2 for connection to a bus module MBM
- Interlocking with monitored guard locking
- Category 4/PL e for the evaluation of all safety functions
- 2 blanking covers (without submodules)
- Adjustable door hinge; factory setting: left
- Unicode
- Compatible with all Modular devices

Guard locking type

MGB2-L1...	Guard locking by spring force. Release by applying voltage to the guard locking solenoid. (closed-circuit current principle)

Door hinge

On the locking modules, the door stop can be changed from right to left and vice versa at any time with little effort.

Dimensional drawings

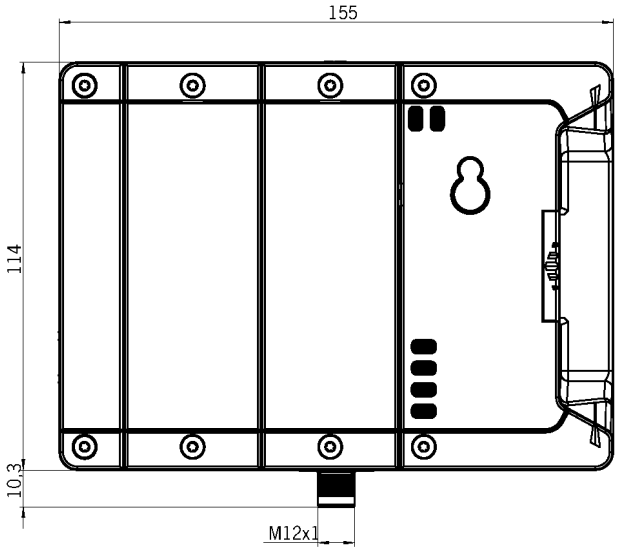

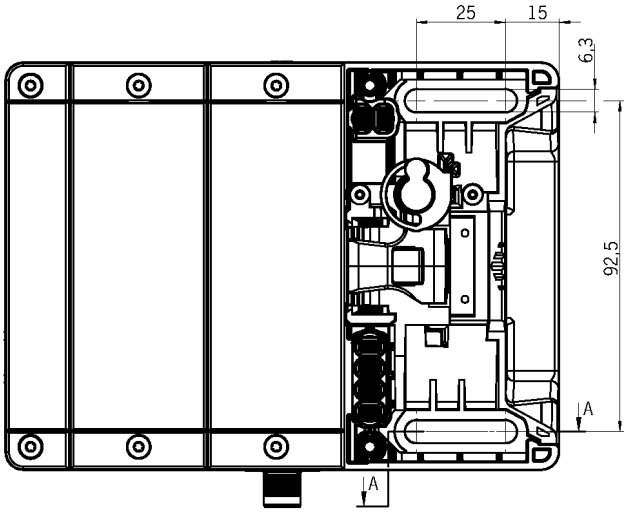

A- A

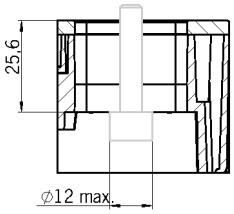

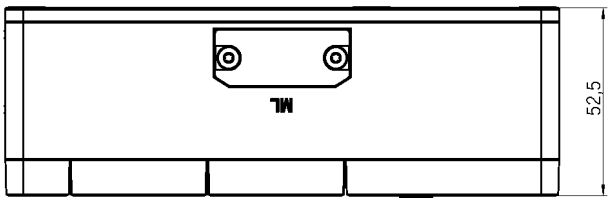
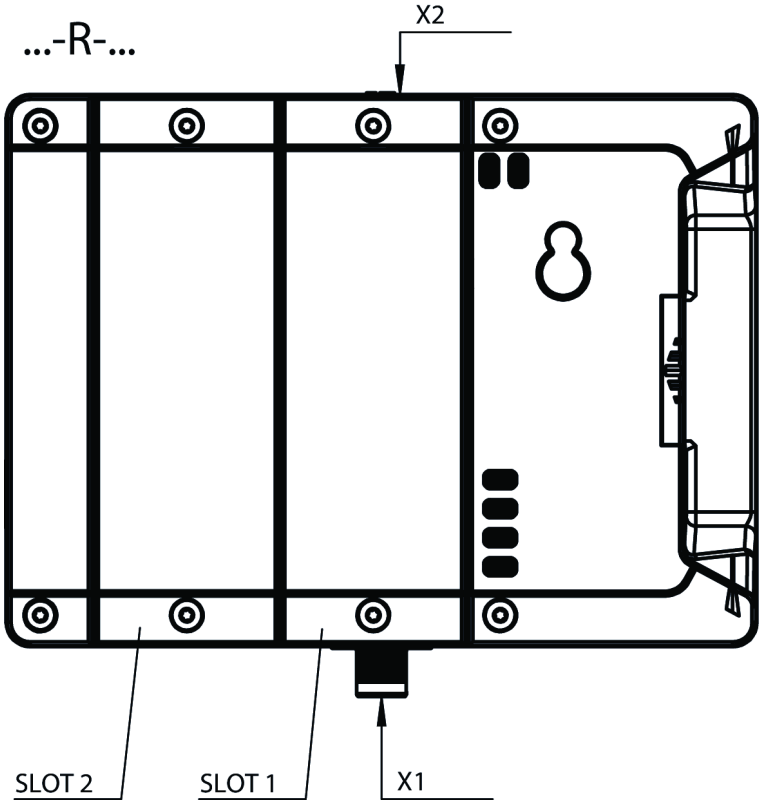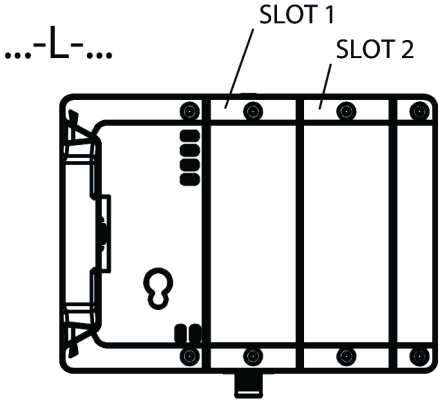
Dimensional drawings