MGB-L1C-ARA-R-109798 (Order no. 109798)

Locking module MGB-L1-ARA... (guard locking by spring force) with 3 pushbuttons, 2 indicators, emergency stop, incl. label carrier, RC26

- Guard locking with guard lock monitoring
- Can be connected in series with other AR devices (e.g. CES-AR and CET-AR)
- With control module MGB-C
- Emergency stop according to ISO 13850
- 3 pushbuttons (illuminated, wh, wh, bu)
- 2 indicators (illuminated, gn, rd)
- incl. adhesive labels
- With plug connector RC26
- Unicode

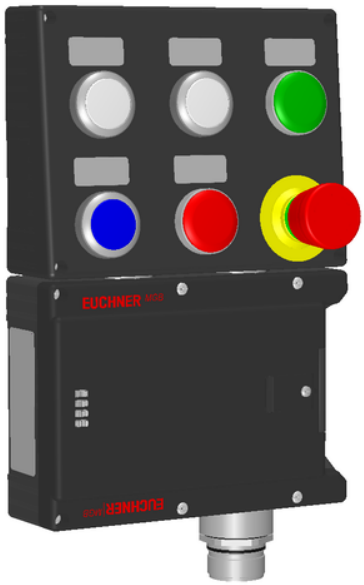

Guard locking type

MGB-L1...	The locking arm is held in the locked position by spring force and is unlocked by solenoid force (closed-circuit current principle, mechanically locked).

Door hinge

A mechanical door stop is permanently integrated into the evaluation module of the MGB. A marking on the stop makes adjustment easier.

LED indicator

The LED indicator indicates all important system and status information.

Monitoring outputs

OD ON when the door is closed

OT Bolt tongue inserted into the evaluation module

OL Guard locking solenoid in locked position

OI Diagnostics; there is a fault

Emergency stop device

S1 2 positively driven contacts and 1 NO contact (e.g. monitoring contact), emergency stop with turn-to-reset, not illuminated

Pushbuttons

S10 1 NO contact, white, illuminated

S11 1 NO contact, white, illuminated

S15 1 NO contact, blue, illuminated

Indicators

H12 LED, green

H14 LED, red

Adhesive labels

Devices with adhesive labels have pre-formed recesses. The adhesive labels enclosed (standard size 12.5 x 27 mm) can be affixed in these recesses.

Dimensional drawings

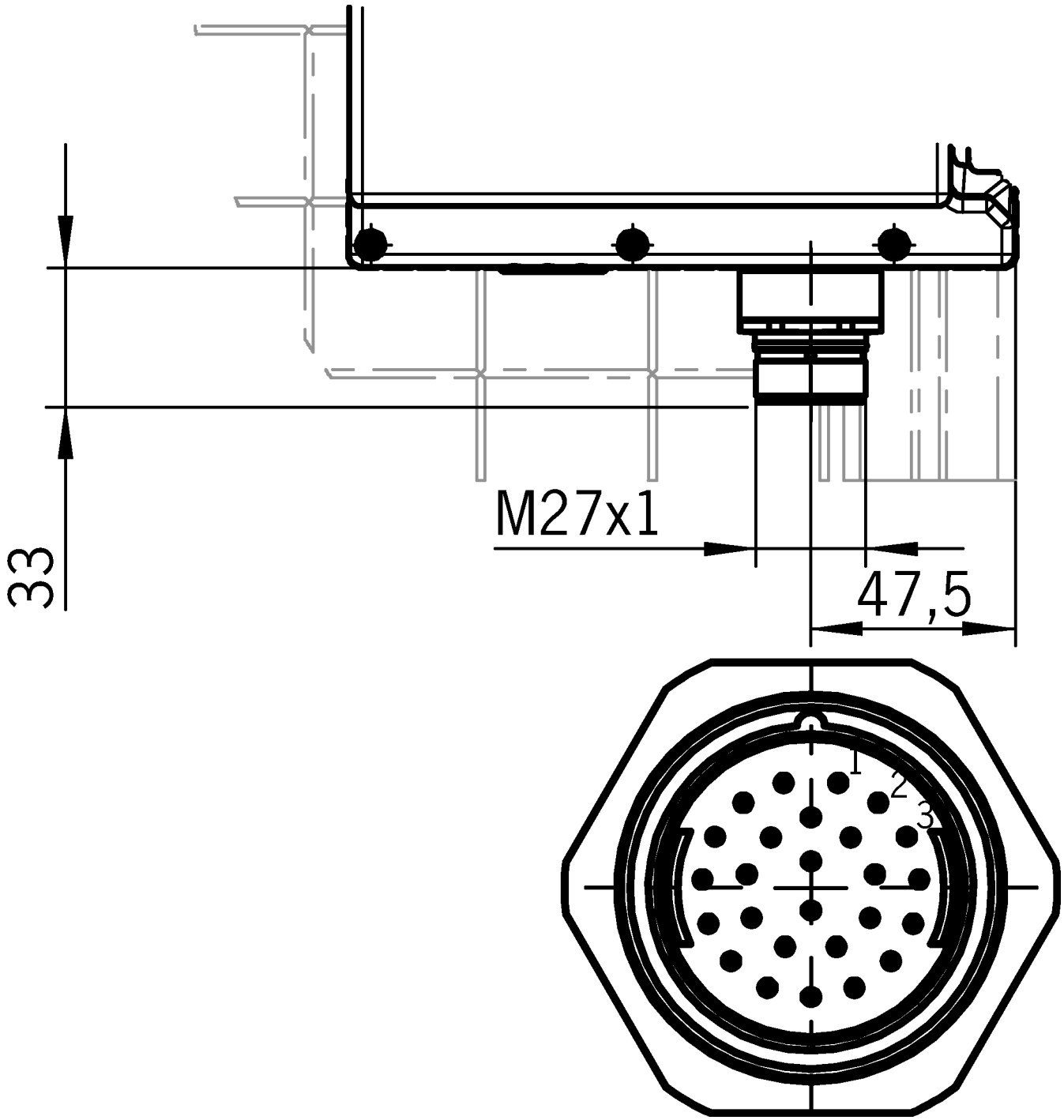

Dimensional drawings

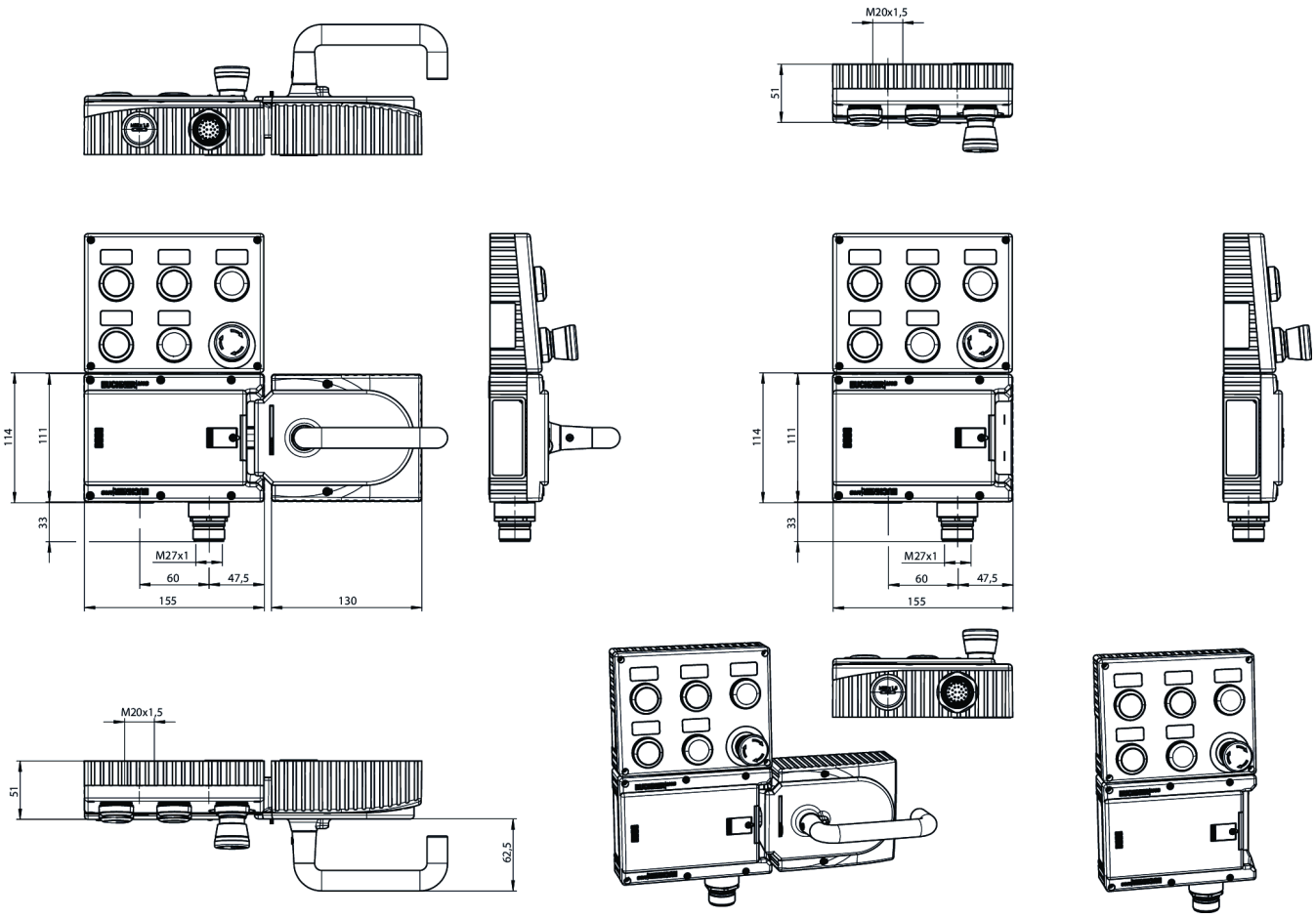
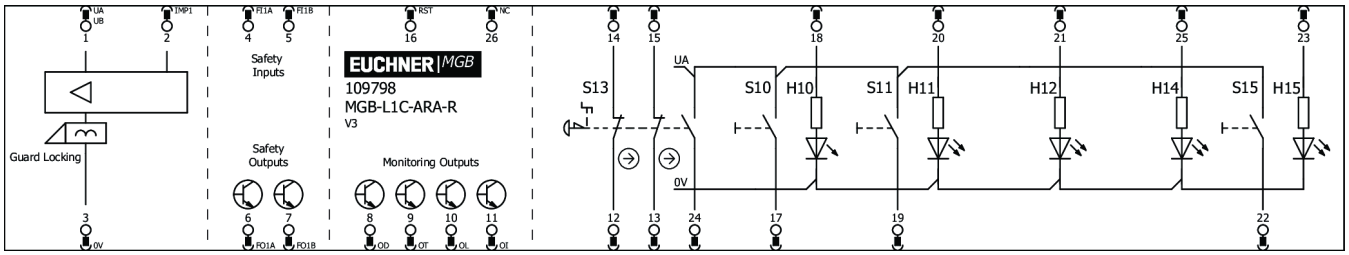
Connection examples