CES-A-UEA-04B (Order no. 097075)

Evaluation unit CES-A-AEA-04B/CES-A-UEA-04B (for 4 read heads)

- 4 read heads can be connected
- 2 safety contacts (relay contacts)
- 1 internal normally open contact per safety contact
- Start button and feedback loop can be connected
- Multicode evaluation unit
- Category 4 / PL e according to EN ISO 13849-1

Multicode evaluation unit

Every suitable actuator is detected by the evaluation unit.

Category according to EN ISO 13849-1

Due to two redundant relay outputs (safety outputs) with internally monitored contacts, suitable for:

- Category 4 / PL e according to EN ISO 13849-1

Actuating range

The evaluation unit has the standard actuating range that, e.g., permits larger tolerances in the alignment of read head and actuator.

TST	Input for self-test
DIA	Diagnostic output
O1...O4	Monitoring outputs (semiconductor)
Y1,Y2	Feedback loop
S	Start button connection

Dimensional drawings

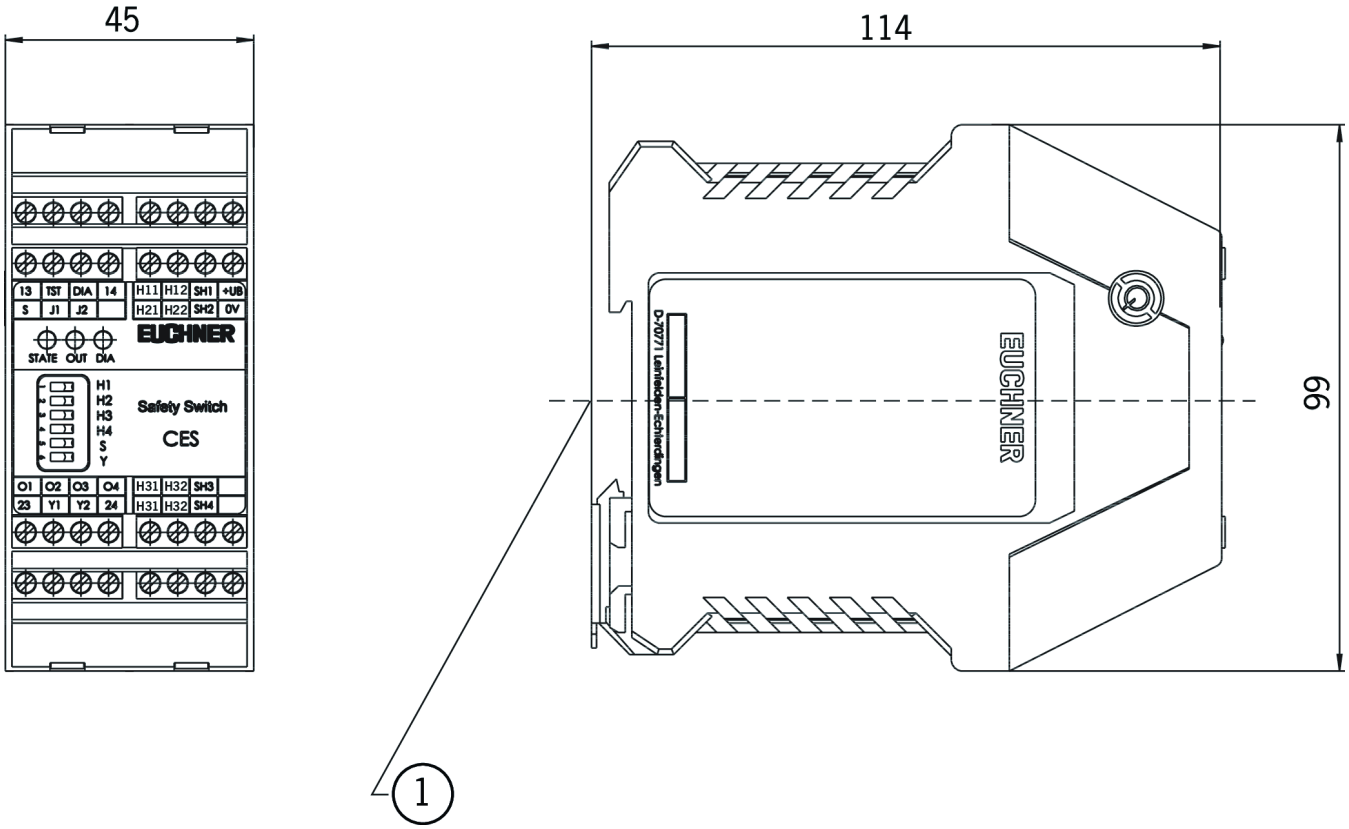

1 Suitable for 35 mm mounting rail according to EN 60715

Connection examples

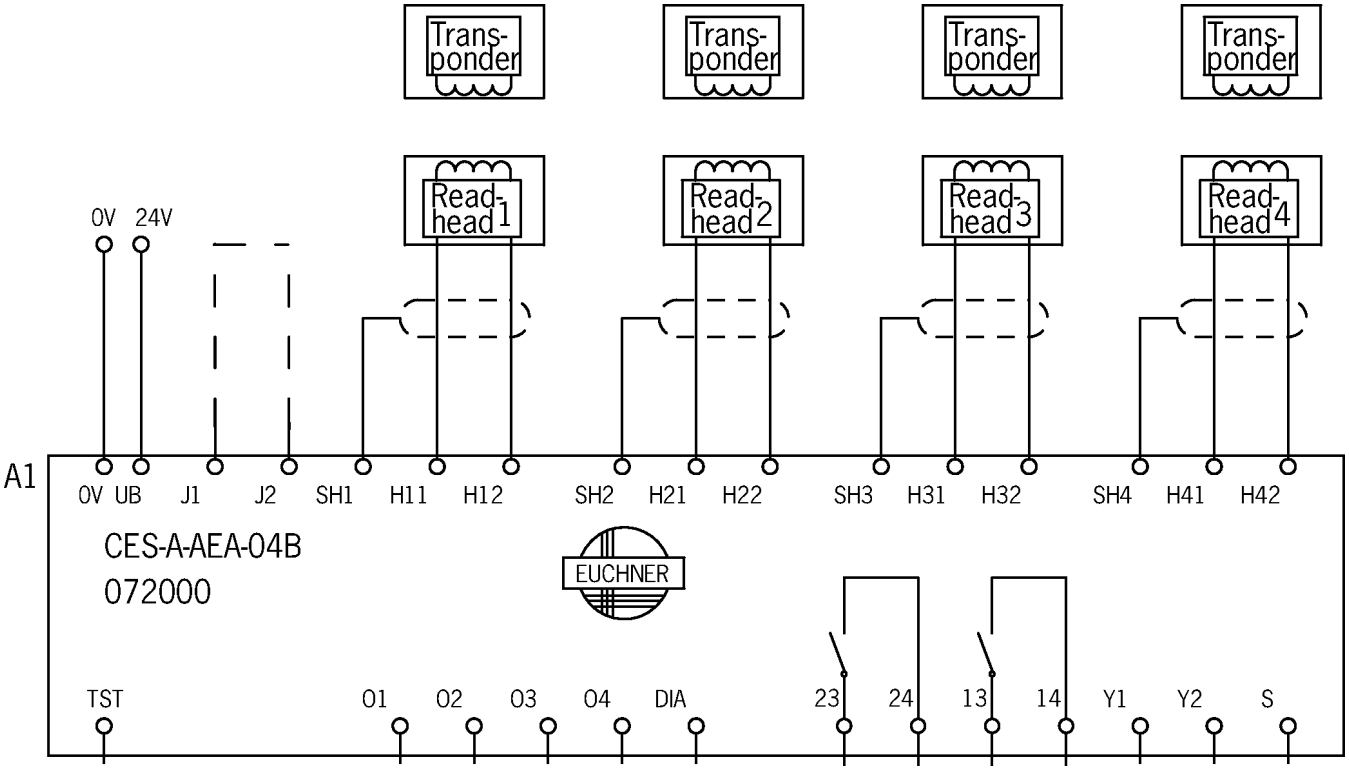

Technical data

Approvals

Workspace

Repeat accuracy R	
according to EN 60947-5-2	10 %

Operating and display elements

LED display

red: – operating fault

red: – external fault (fault in the feedback loop)

green: status indication (multifunction display using flashing modes)

yellow: safety circuit closed

red: – internal device fault

red: – invalid teach-in operation

Item	Color	Extras	Note slide-in label	Version	Slide-in label	Switching element	Number	Designation1	LED
		Configuration setting for teach-in operation		DIP switches (H1, H2, H3, H4, S, Y)					

Electrical connection values

Fuse	
external (operating voltage UB)	0.25 … 8 A
Connection cross section	
Screw terminals	0.25 … 2.5 mm²
Operating voltage DC	
U_B	21 … 24 … 27 V DC regulated, residual ripple<5%
EMC protection requirements	Acc. to EN IEC 60947-5-3