C-M26F12-12X1,0PU10,0-MA-077636 (Order no. 077636)

Connecting cable with plug connector SR11, 10 m, angled

- Female plug SR11, 11-pin + PE
- Angled plug connector
- PUR cable
- Cable length 10 m
- With flying lead

Connector assignment

1	1
2	2
3	3
4	4
5	5
6	6
7	7
8	8
9	9
10	10
11	11
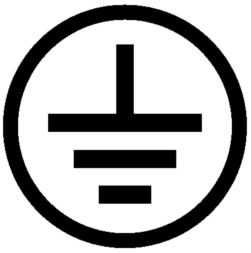	12

Dimensional drawings

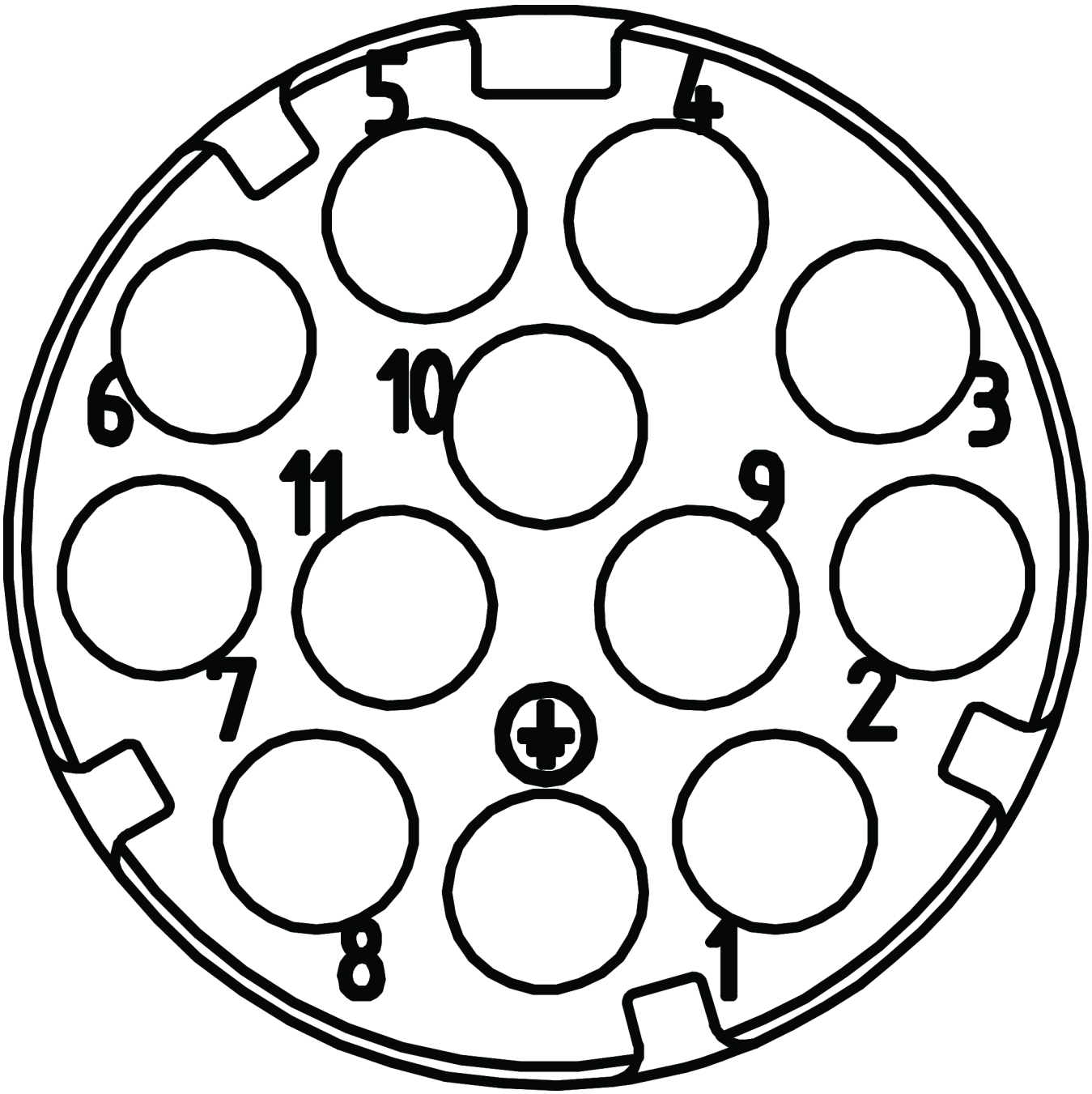
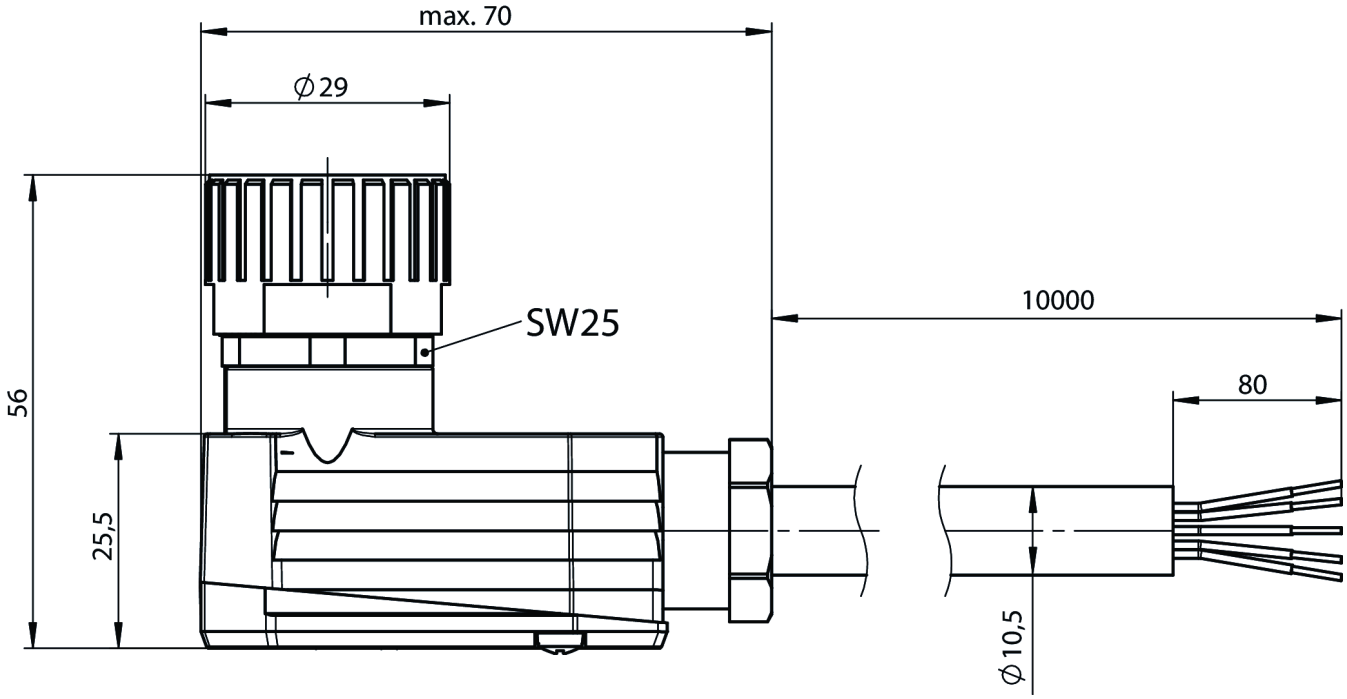
Dimensional drawings