C-M08F04-04X025PV50,0-ES-097100 (Order no. 097100)

Connecting cable with plug connector M8, 50 m

- M8 female plug, 4-pin
- Straight plug connector
- PVC cable
- Cable length 50 m
- With flying lead

Dimensional drawings

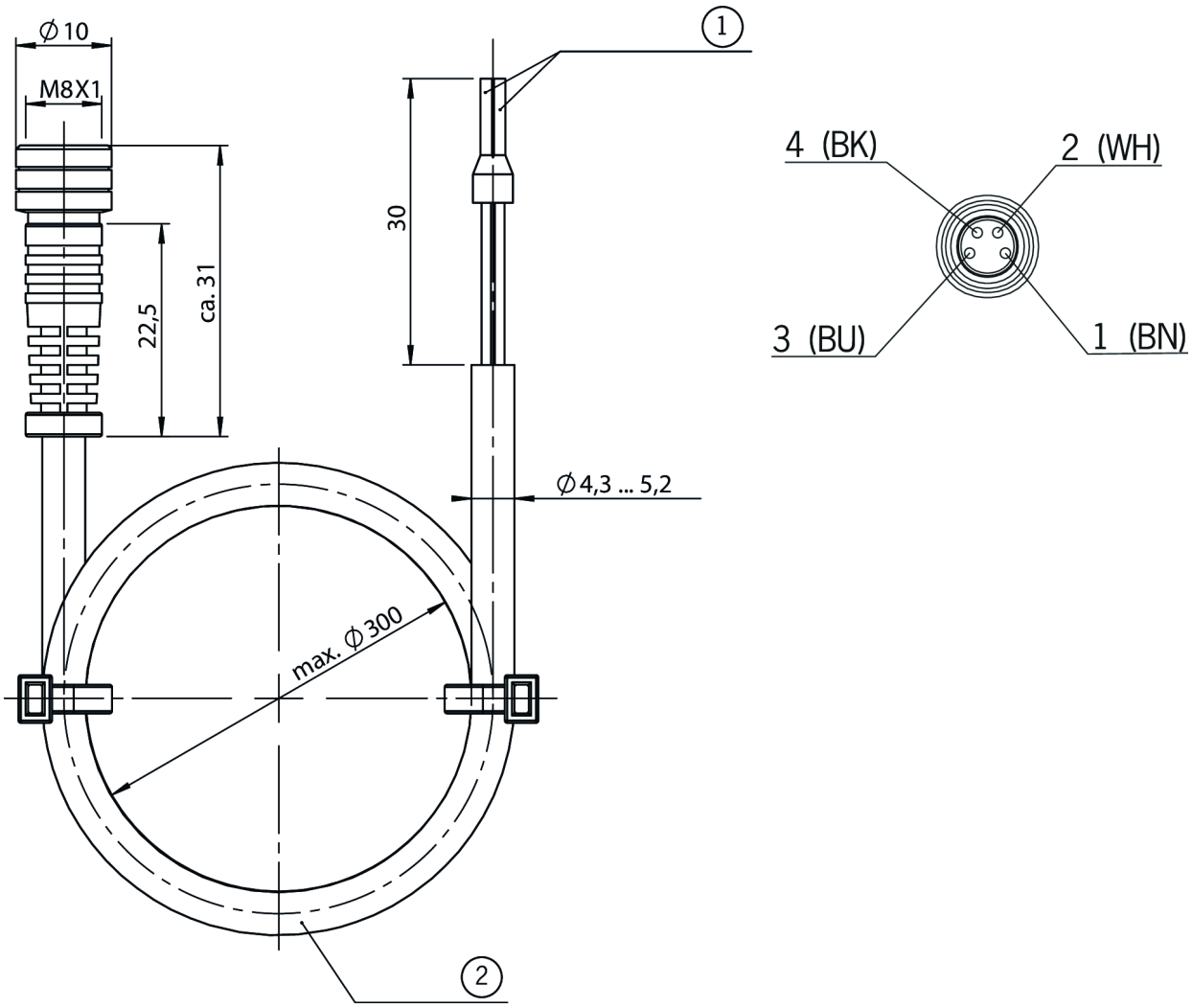

1 Cable end sleeves with insulating collar, color code according to DIN 46228

2 PVC cable LiYY-4 x 0.25²

Technical data

Approvals

UL LISTED c UL us LISTED

Electrical connection values

	Connection 1
Rated voltage	36 V

Mechanical values and environment

Conductor identification	Color code
Conductor cross-section	0.25 mm²
Number of conductors	4
Tightening torque	0.3 Nm
Dynamic bending radius	10 x cable diameter
Static bending radius	5 x cable diameter
Storage temperature	-30 ... 80 °C
Cable type	straight
Cable diameter	
approx.	4.3 mm
Cable length	50 m
Sheath color	black
Drag chain suitability	No
Cable ambient temperature (dynamic)	-5 ... 70 °C
Cable ambient temperature (static)	-30 ... 80 °C
Material	
Sheath	PVC
	Connection 2
Conductor end	Cable end sleeve
Connection type	flying lead
	Connection 1

Connection type	Plug connector M8x1
Connection type	Female plug
Cable outlet	straight
Number of pins	4
Degree of protection	IP67 (in the inserted state)
Plug lock	Screw connection
Material	
Plug housing	TPU