SGP1E-2131A-M (Order no. 097706)

Safety switch SGP, cable entry M20 x 1.5

- 3 x cable entry M20 x 1.5
- 3 pos. driven contact
- 1 NO contacts

Approach direction

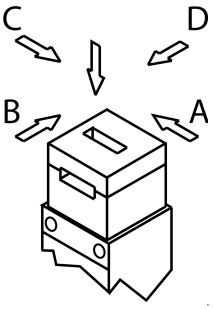

Horizontal and vertical
Can be adjusted in 90° steps

Switching element

2131 Slow-action switching contact 3 positively driven contacts ⊖+ 1 NO contact

Accessories required

Actuator is not included.

Dimensional drawings

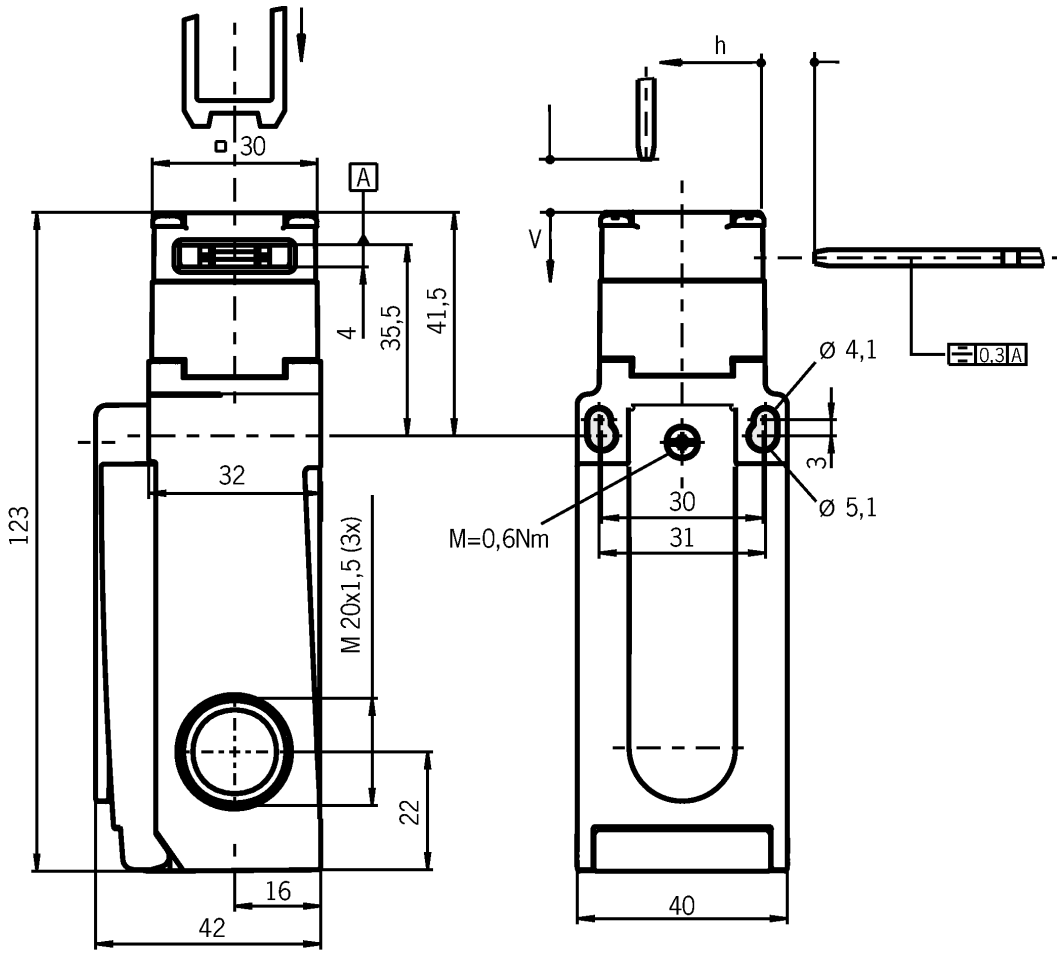

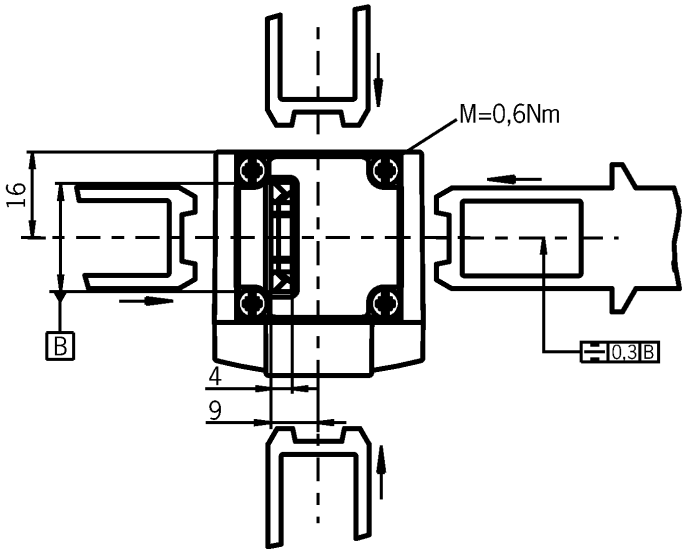
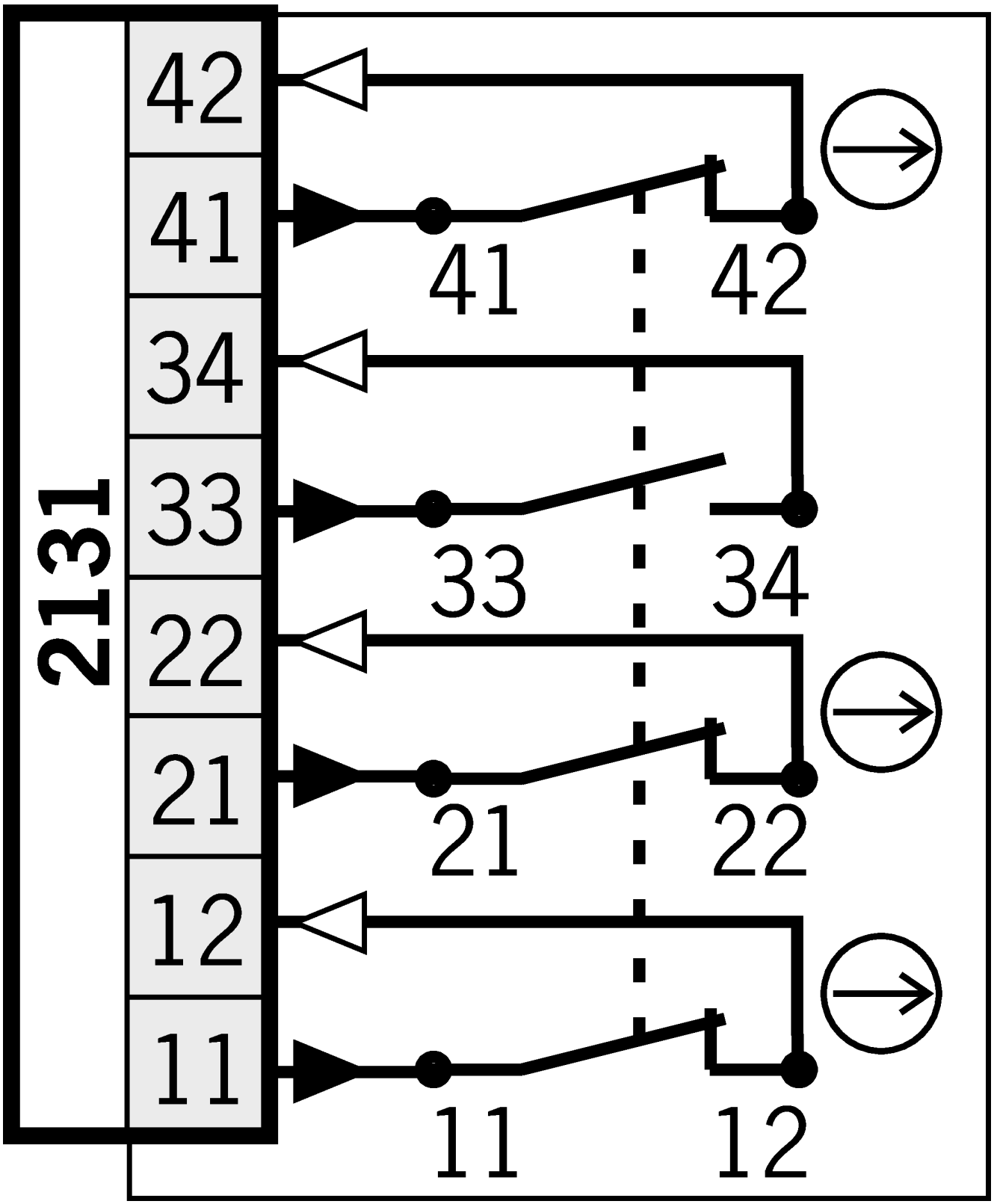
Connection examples