GLBF02R08-552-M (Order no. 085991)

Series GLBF... 8 mm, mechanical

- Plunger spacing 8 mm
- Horizontal housing
- Degree of protection IP67 according to IEC 60529

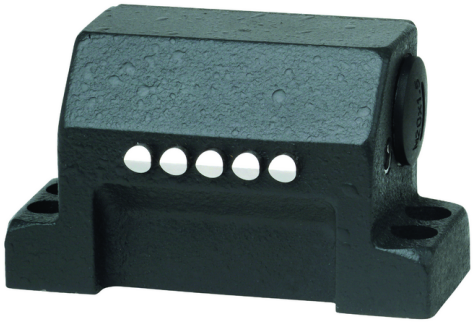

Switching element

ES 552 Snap-action switching contact 1 changeover contact standard switching element

Dimensional drawings

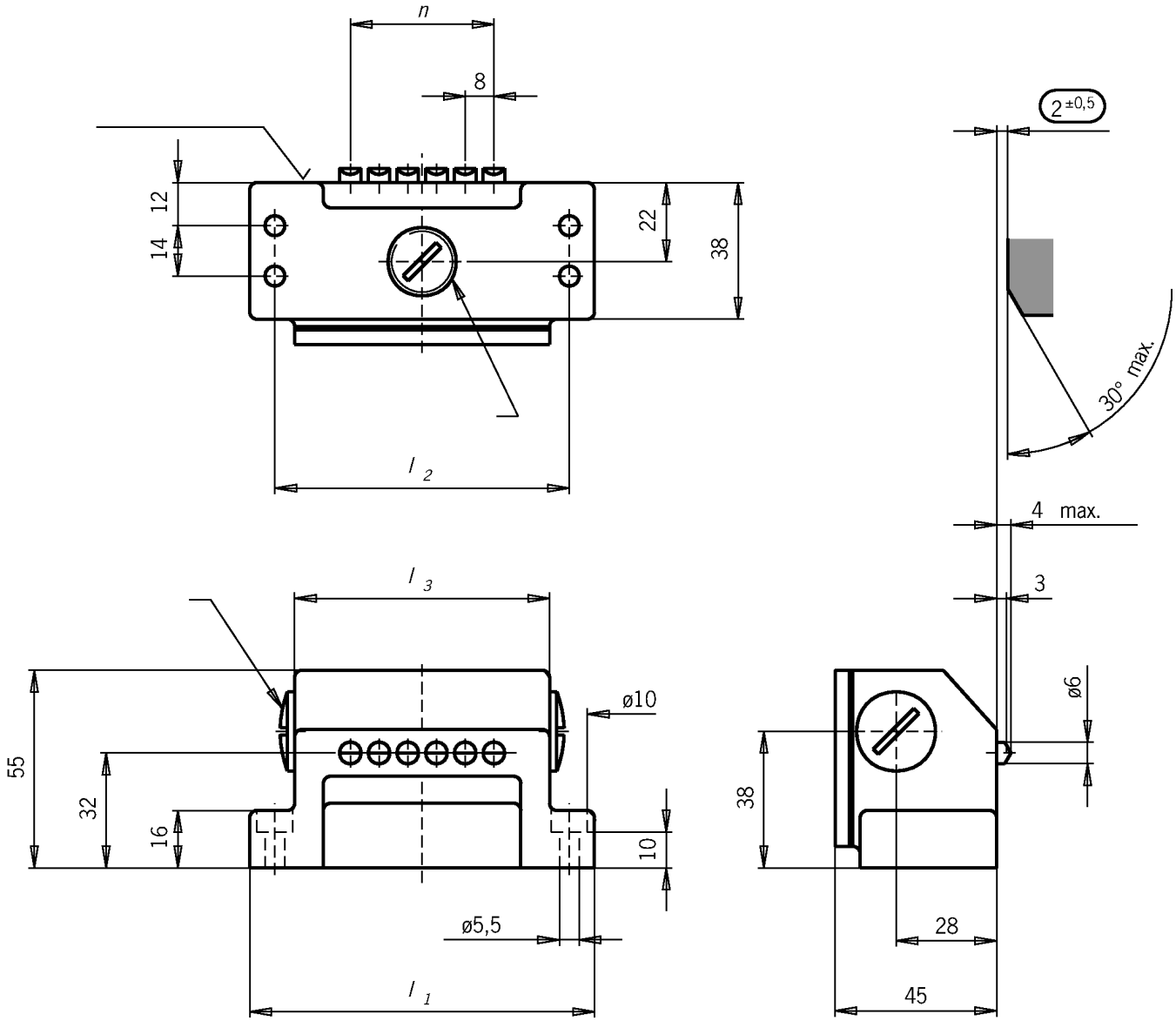

Connection examples

ES 552

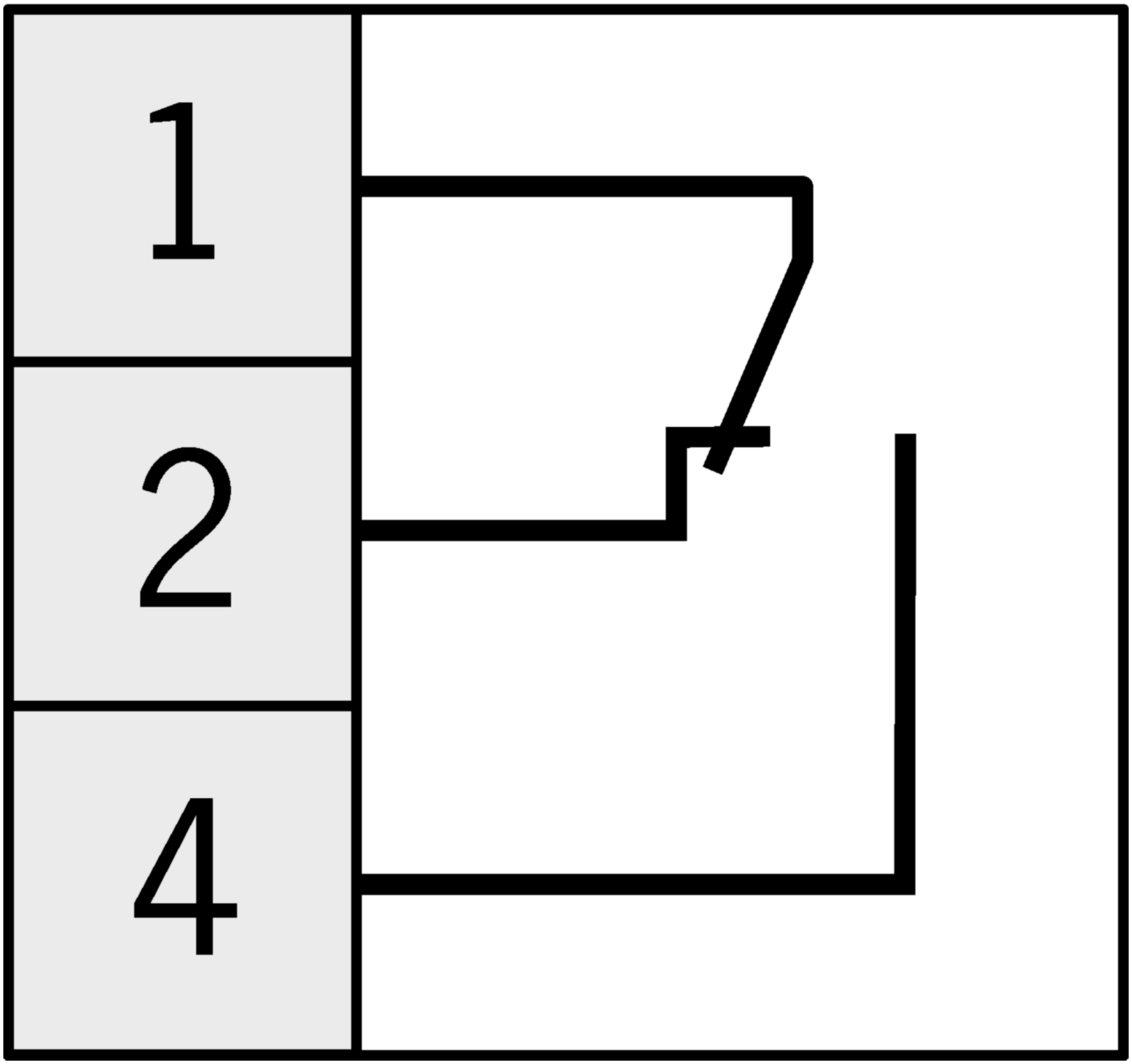

Technical data

Approvals

Electrical connection values

Fuse	max. 6 A gG
Connection cross section	0.14 … 1.0 mm²
Rated insulation voltage U_i	250 V
Rated impulse voltage U_{imp}	2.5 kV
Utilization category	
AC-15	2 A 230 V
DC-13	2 A 24 V
Switching current	
min. at DC 24V	min. 10 mA
thermal rated current I_{th}	6 A

Mechanical values and environment

Anfahrgeschwindigkeit	0.01 … 50 m/min
Connection type	
3 x	M20 x 1.5
Number of switching elements	2
Number of changeover contacts	2
Tightening torque	
Screw terminal	max. 0.2 Nm Hexagon socket AF 1.3 mm
Design	horizontal
Actuating element	
Slide bearing	Roller plunger (Operating point accuracy ± 0.05. The reproducible operating point accuracy refers to the axial travel of the plunger after the switching element ES 552 has been run-in with approx. 2,000 operating cycles.)
Actuating force	min. 15 N