N1AR514AM-M (Order no. 087158)

Single limit switch N1AR, roller plunger with external diaphragm, cable entry M16x1.5

- Roller plunger, steel roller ø 5 mm
- Housing according to DIN 43693
- 2 x cable entry M16x1.5
- 1 pos. driven contact
- 1 NO contacts
- Exterior diaphragm

Approach direction

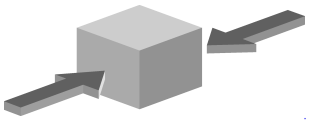

Horizontal

Can be adjusted in 90° steps

Exterior diaphragm

Protection against heavy soiling (dust) and aggressive coolants.

Switching element

514 Snap-action switching contact, 1 positively driven contact ⊖+ 1 NO contact

Dimensional drawings

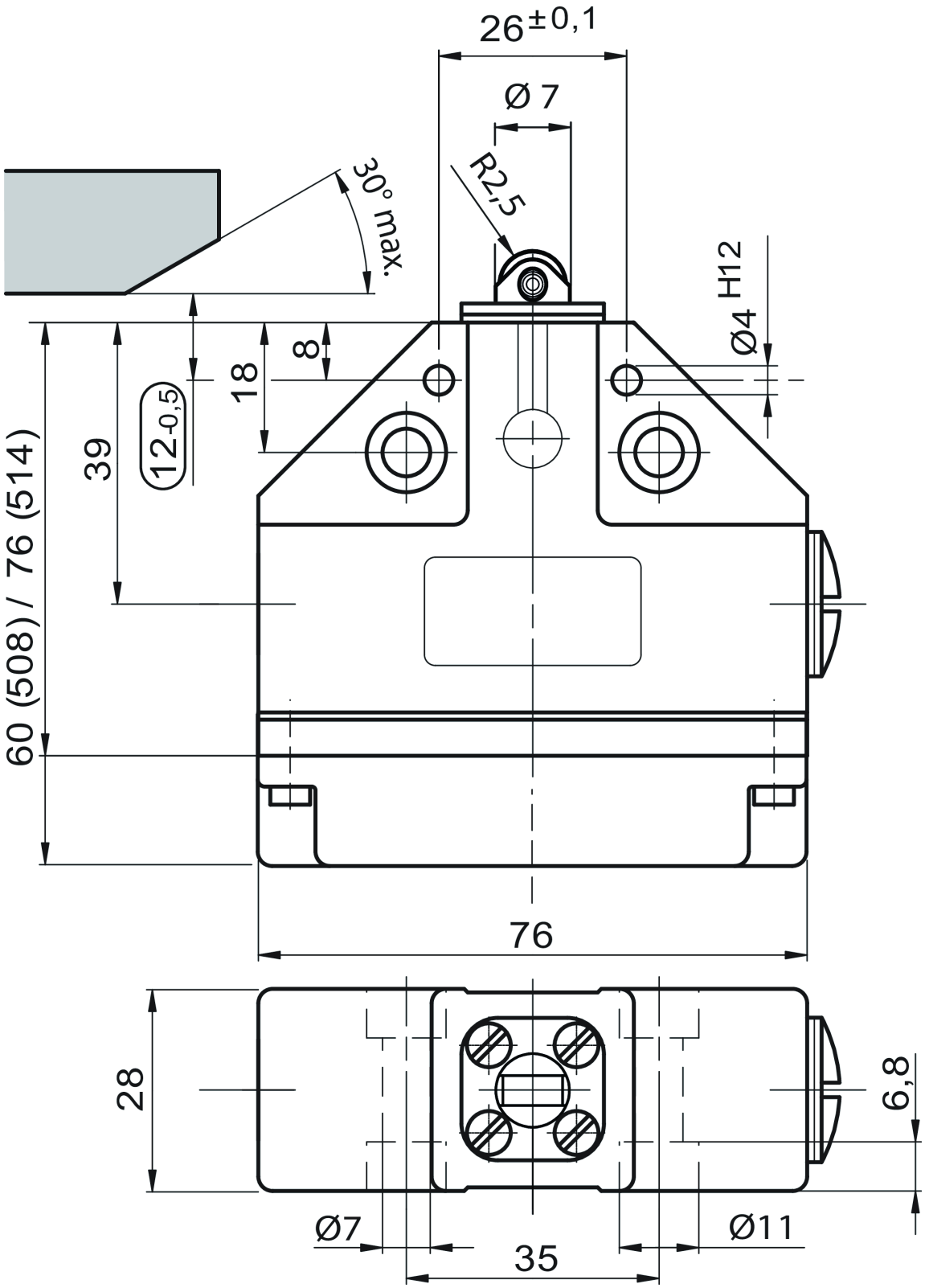

Connection examples

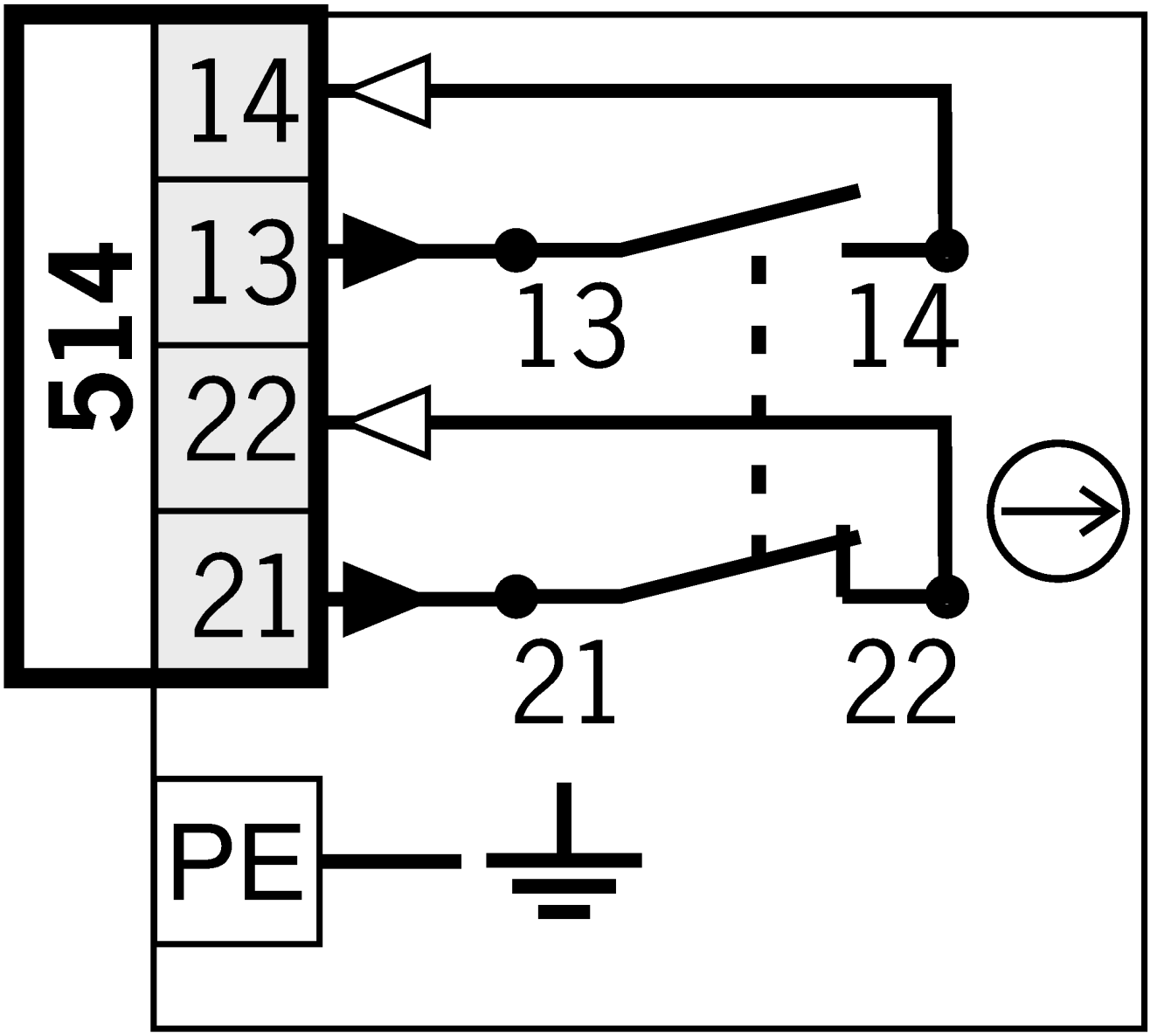

Shift travel diagrams

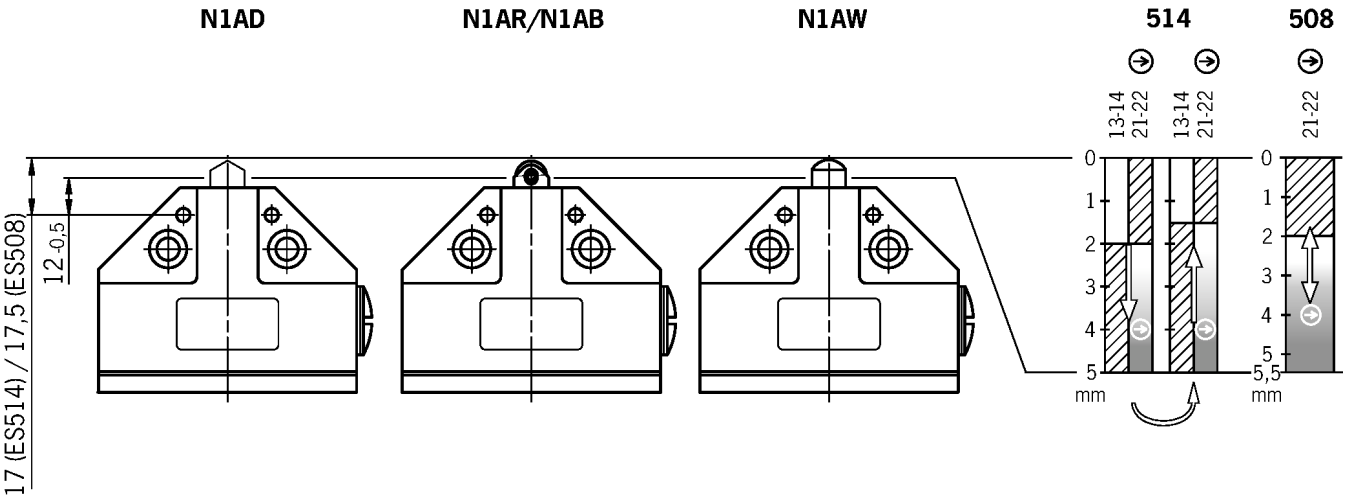

g_Kontakte_geschlossen_sw.eps Contacts closed