RADIUSBETAETIGER-P-LRN (Order no. 074573)

Hinged actuator, left/right, for safety switch NP/GP/TP, increased overtravel

- Actuator made of stainless steel
- Two stainless-steel safety screws per actuator
- For doors hinged on the right and left

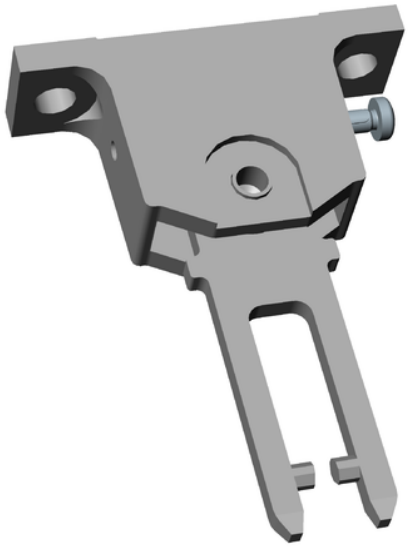

Hinged actuators

For door radii less than 1000 mm a hinged actuator should be used. The spring action movement of the actuator prevents damage due to the actuator jamming in the actuating head. Depending on the movement of the guard, the actuator must be selected for left/right or top/bottom.

Dimensional drawings

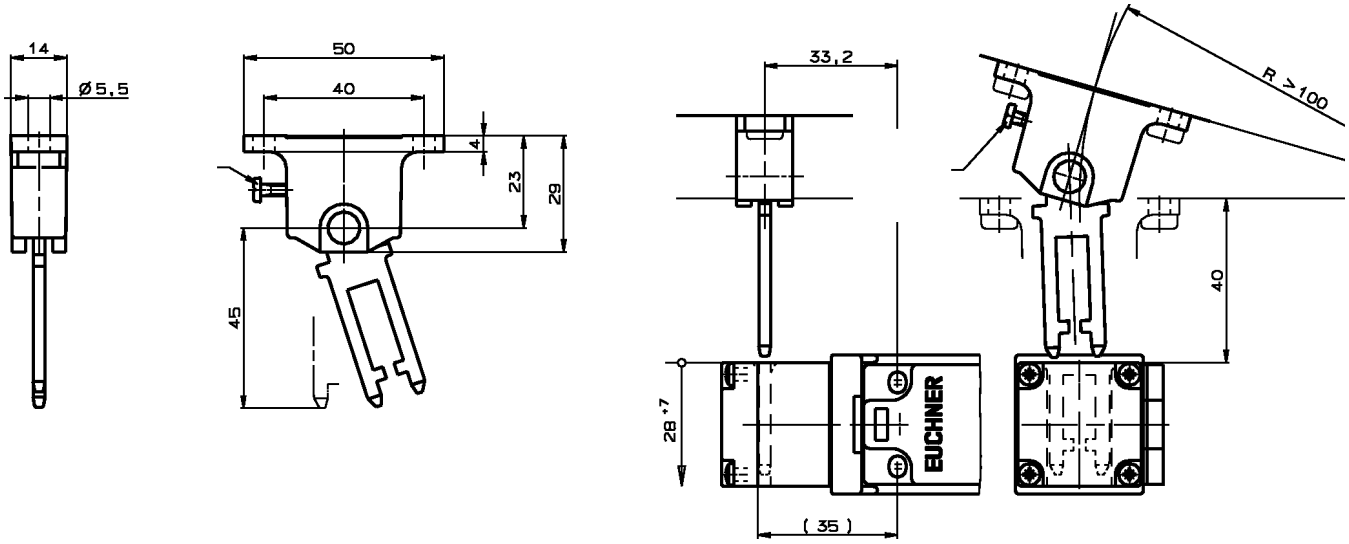

Technical data

Mechanical values and environment

Storage temperature	−25 … 70 °C
Overtravel	max. 7 mm
Door radius	min. 100 mm
Material	
Actuator	Stainless steel
Screw	Stainless steel

Miscellaneous

Usability of insertion funnel	Yes

Downloads

All documentation for this material can be found on our website:
https://www.euchner.de/en-us/a/074573/?#downloads-tab