NG1SB-510L060-M (Order no. 090577)

Position switch NG.SB, plastic rod

- Pivoted lever arm SB (plastic rod)
- Cable entry M20 x 1.5
- LED indicator

Switching element

510 Snap-action switching contact 1 NC + 1 NO

LED function display

A function display is available for the following voltage range:

- 12-60 V AC/DC (standard) L060

Adjustment options

Horizontal and vertical 4 x 90°

Switching direction

Switches to the right, left or both sides

Dimensional drawings

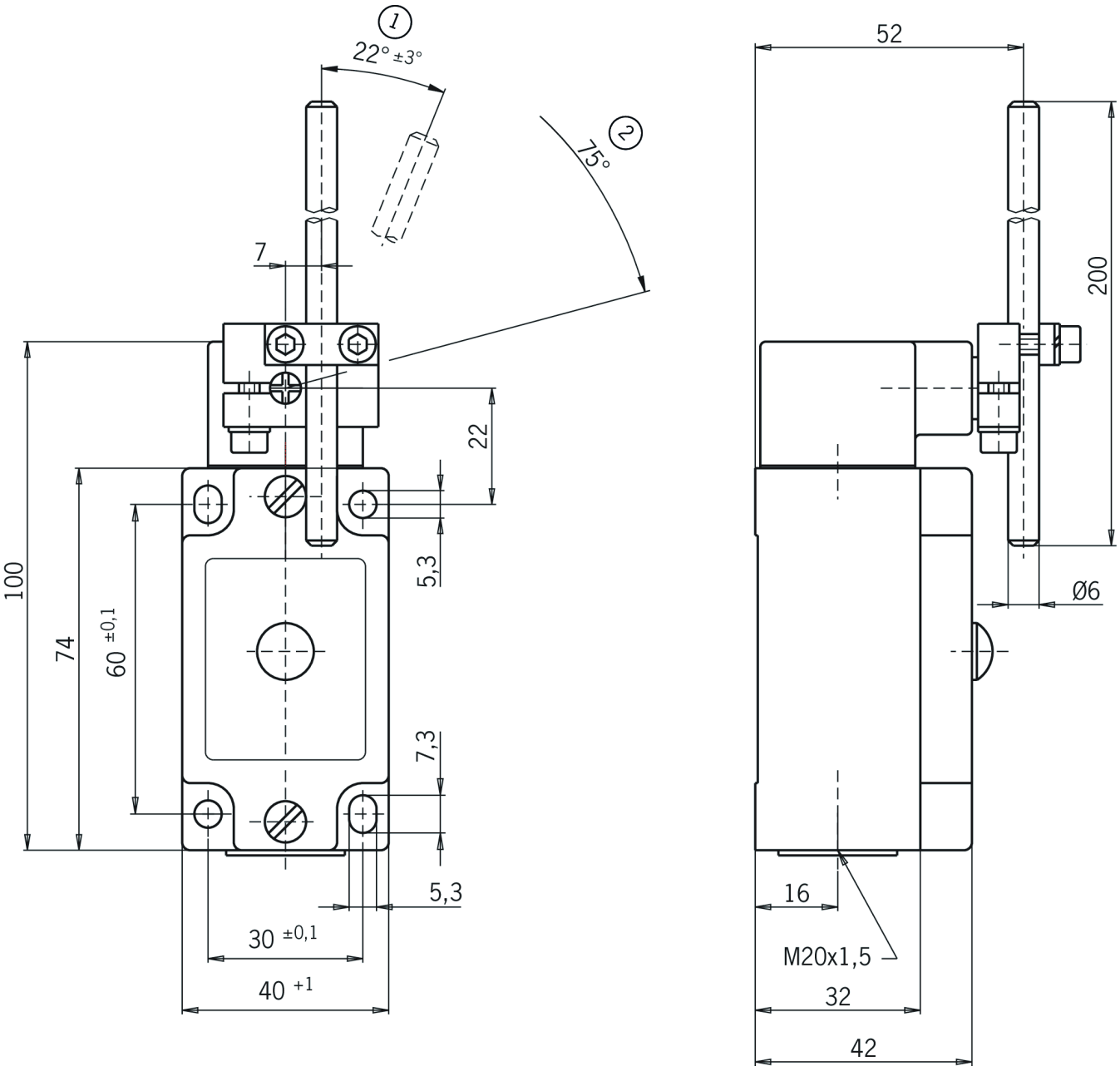

1 Operating point

2 Final position
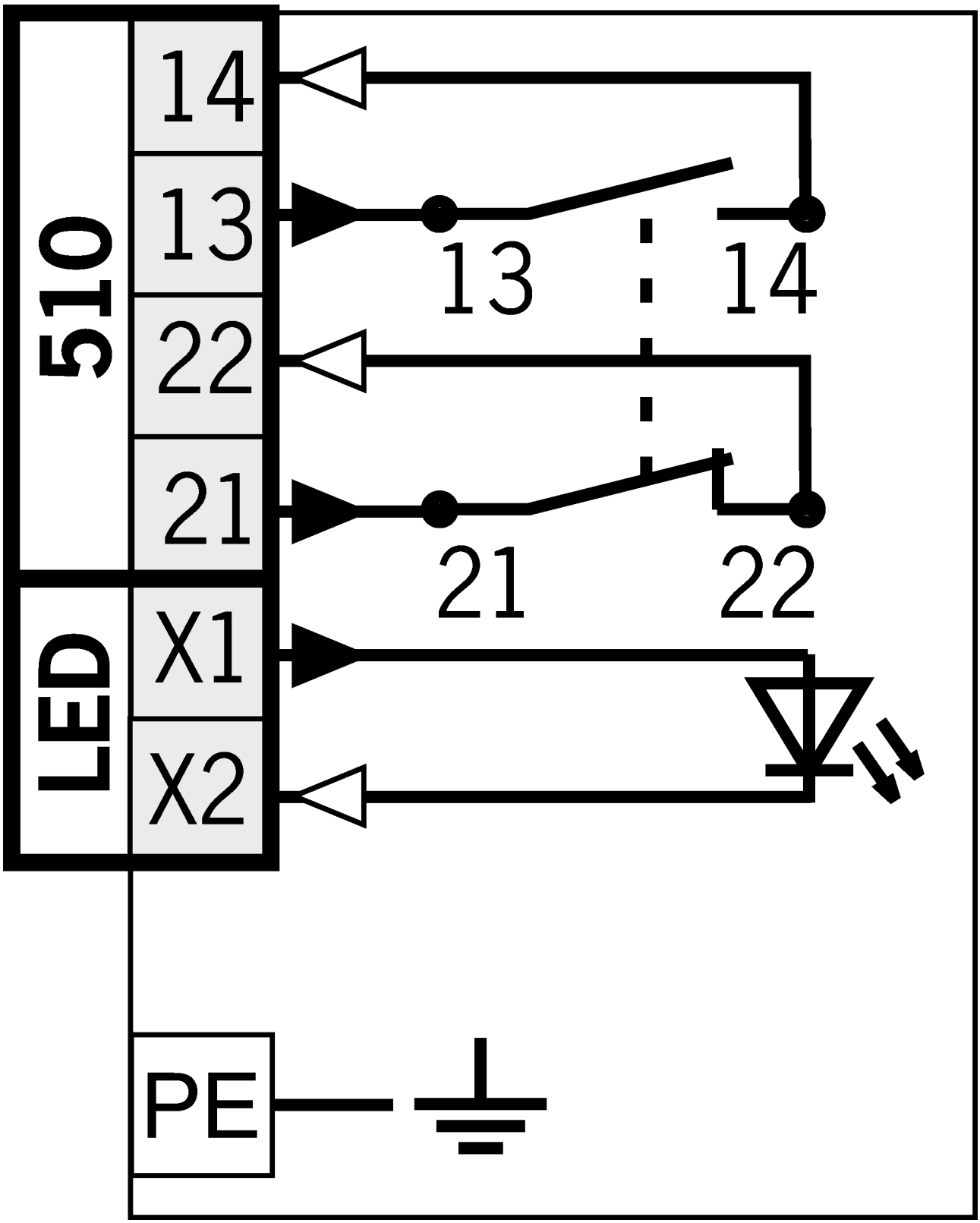
Connection examples