NM11KBA-MC2069 (Order no. 095371)

Safety switch NM.KB with roller arm, short housing, cable entry M16 x 1.5

- Roller arm, roller diameter 12 mm
- short housing
- Cable entry M16 x 1.5
- 1 pos. driven contact
- 1 NO contacts

Approach direction

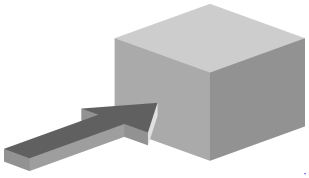

Horizontal
Can be adjusted in 90° steps

Switching element

ES11 Slow-action switching contact 1 positively driven contact ⊖+ 1 NO contact

Dimensional drawings

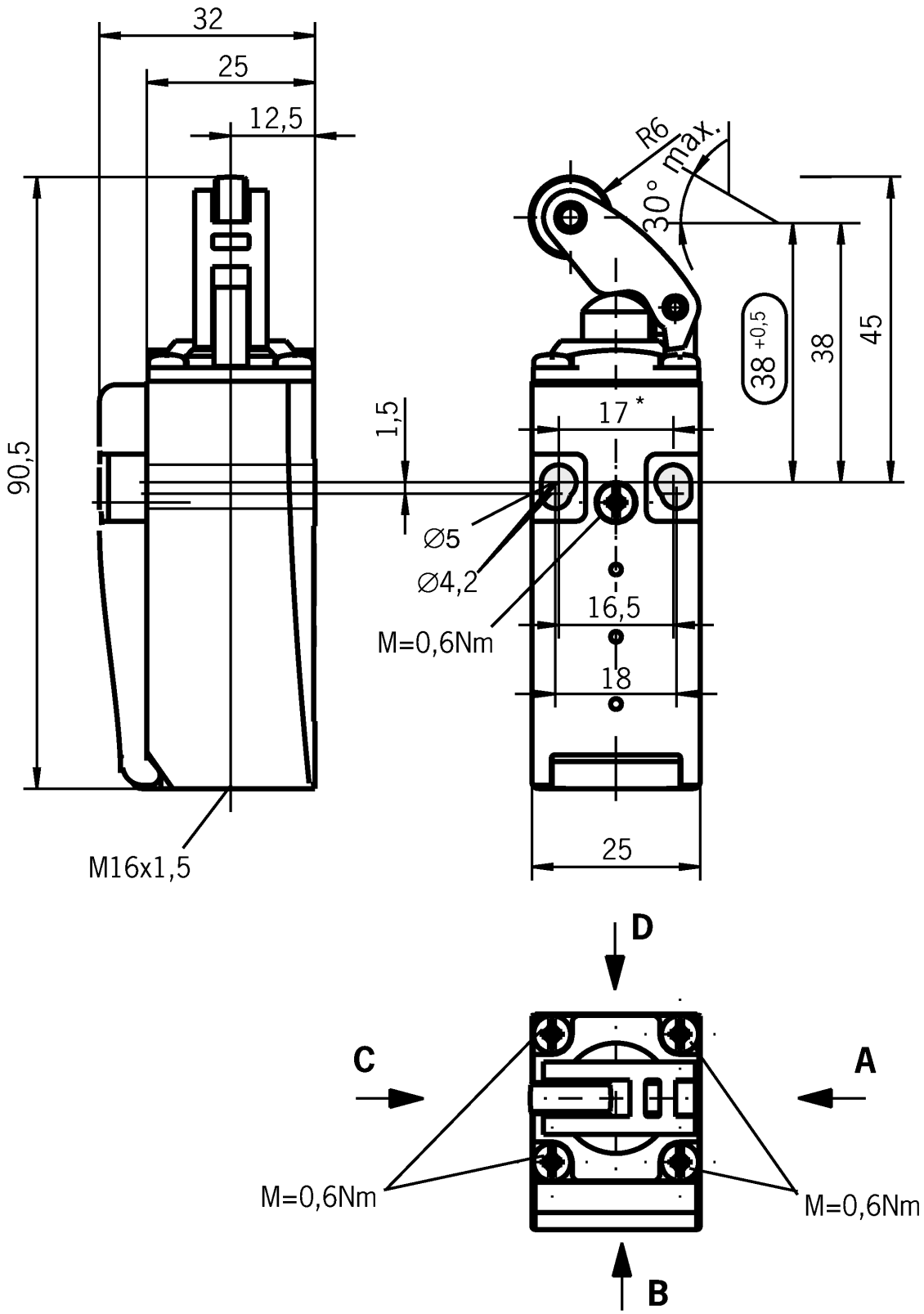

* fixed positioning for safety-related applications (M5)
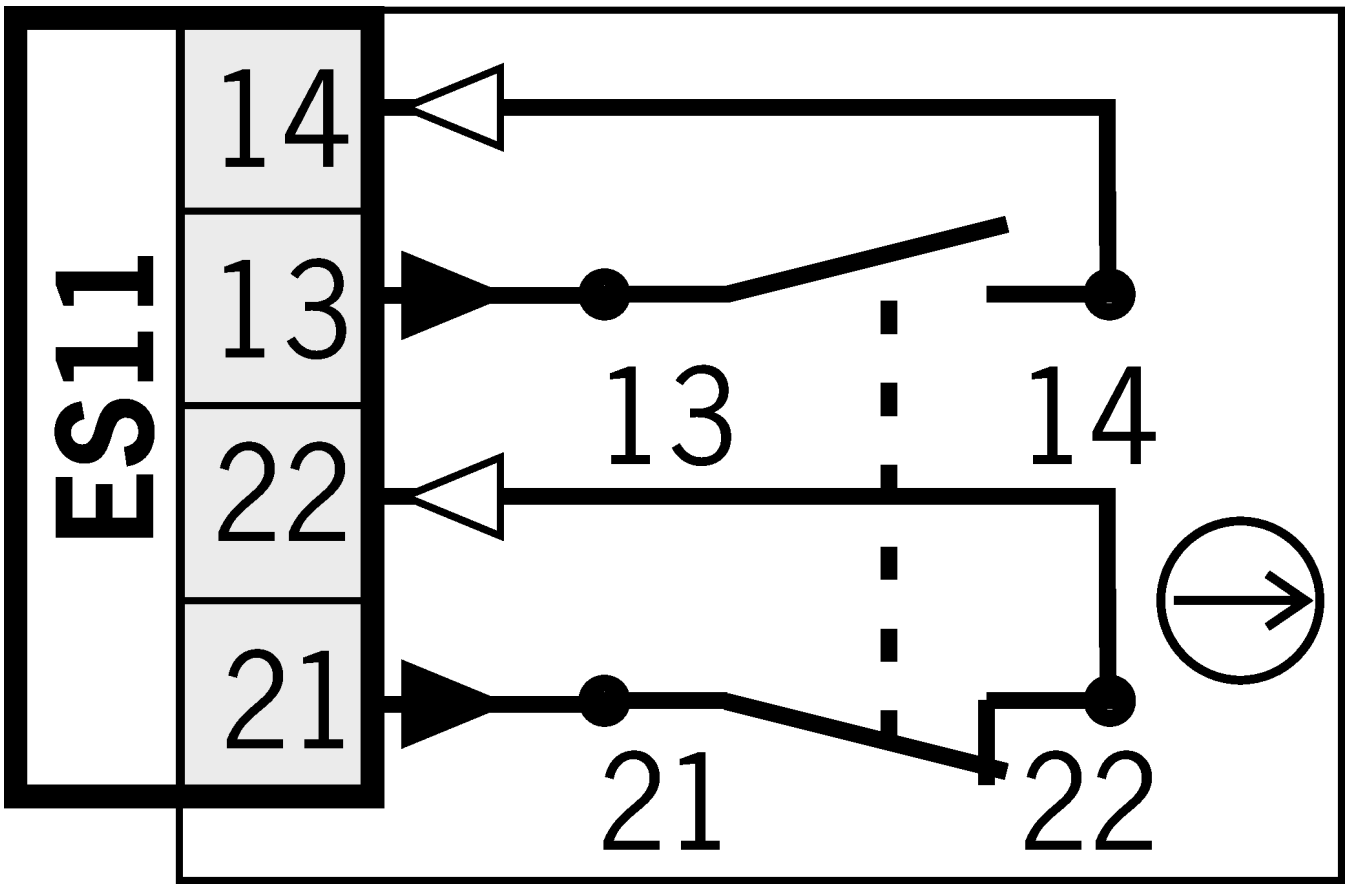
Connection examples