NM11VZA-SM4 (Order no. 085626)

Safety switch NM.VZ, long housing, plug connector M12

- Plug connector M12, 4-pin
- 1 pos. driven contact
- 1 NO contacts

Approach direction

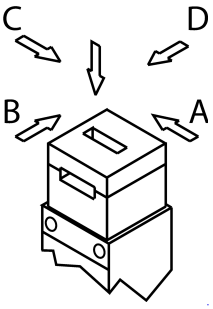

Horizontal and vertical
Can be adjusted in 90° steps

Switching element

ES11 Slow-action switching contact 1 positively driven contact ⊖+ 1 NO contact

Accessories required

Actuator is not included.

Dimensional drawings

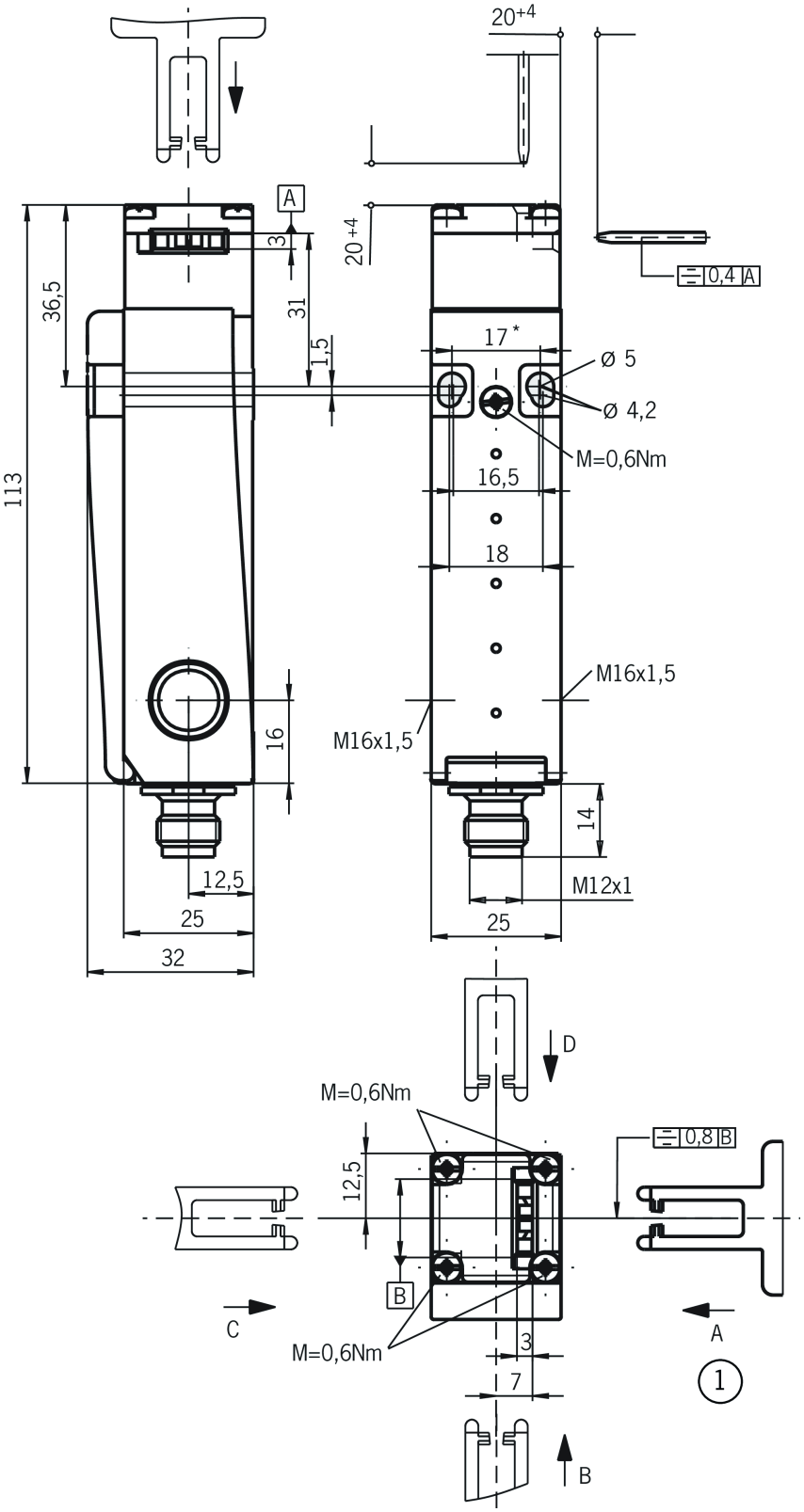

* fixed positioning for safety-related applications (M5)

1 Standard
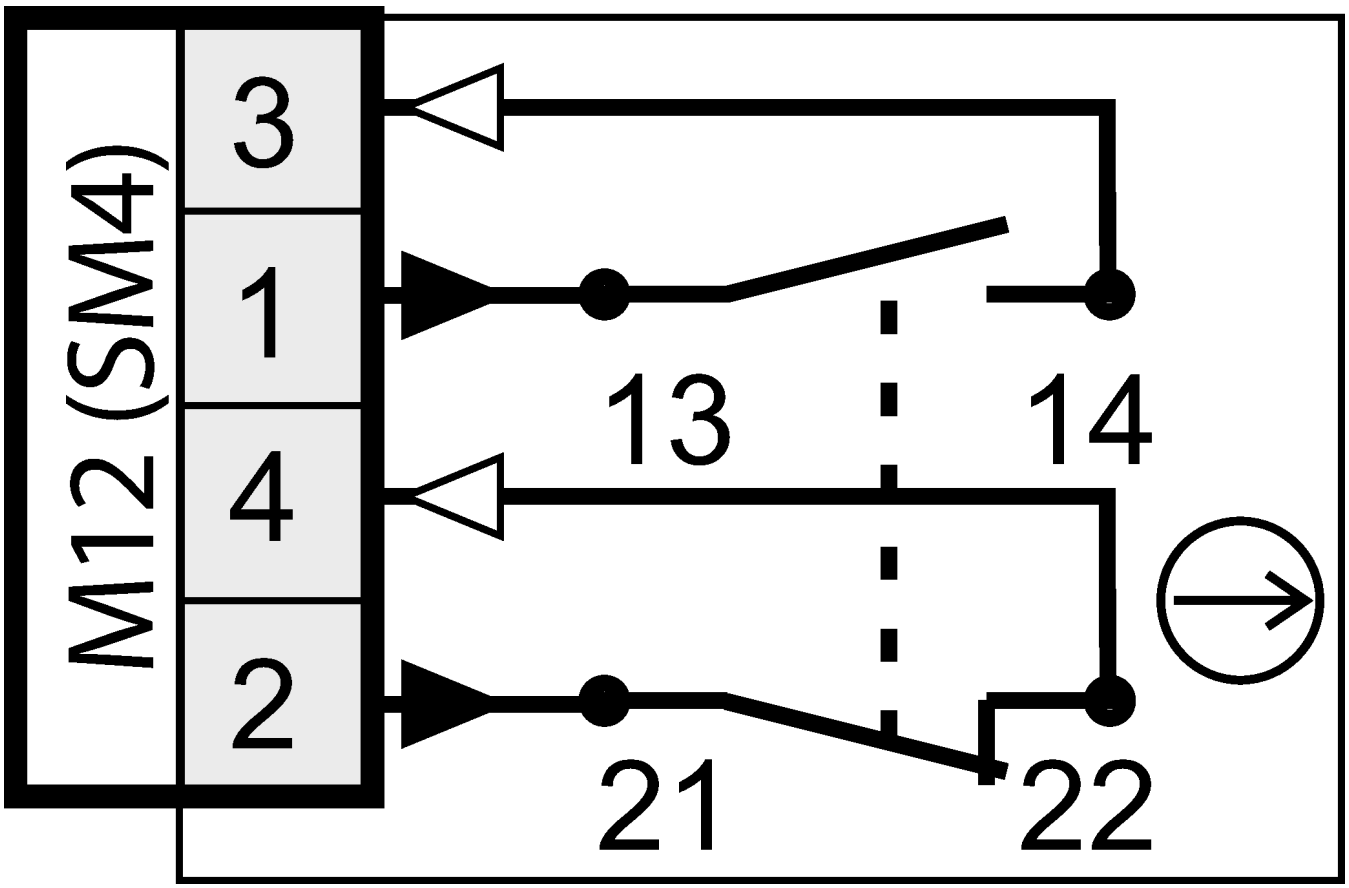
Connection examples