MGB2-L2HE-MLI-U-DA-R-165569 (Order no. 165569)

Locking set MGB2-L2... (2 pushbuttons, emergency stop, open-circuit current principle, door hinge on right)

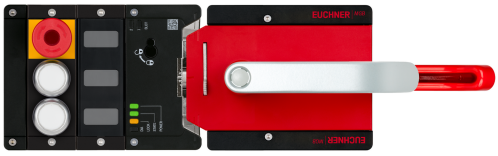

- Guard locking with guard lock monitoring
- Illuminated emergency stop according to ISO 13850
- 2 illuminated pushbuttons
- Adjustable door hinge; factory setting: right
- With escape release
- Unicode
- For connection to any bus module MBM
- Remote or direct mounting of bus module MBM

Flexible connection to any bus module MBM

The locking set can be connected to any bus module MBM, making it the ideal choice for supplementing or expanding existing systems.

Remote mounting

If space is limited, the bus module can be remotely mounted on the locking set.

Guard locking type

MGB2-L2...	Guard locking by solenoid force. Activation of guard locking by applying voltage to the guard locking solenoid. (open-circuit current principle)

Dimensional drawings

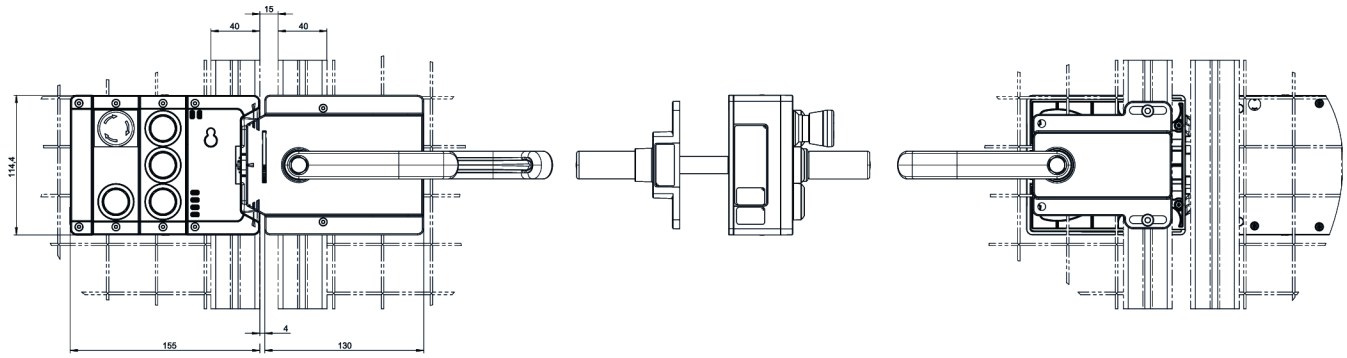

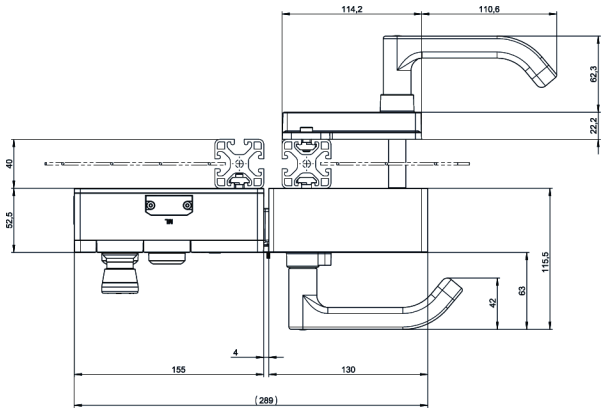

Dimensional drawings

...-R-...

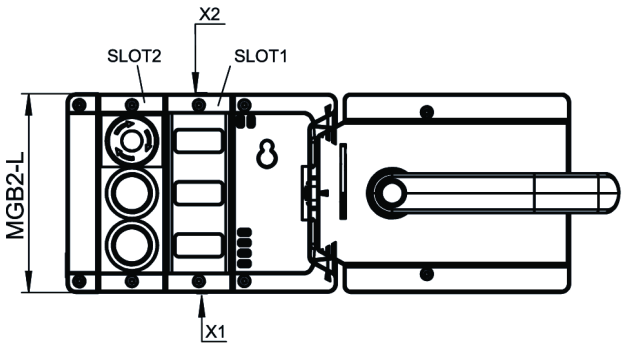
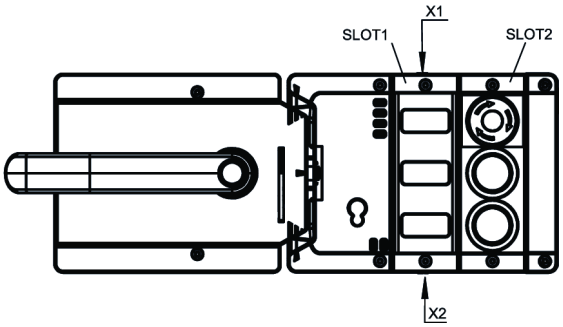
...-L-...