NM01WOK-M (Order no. 084495)

Safety switch NM.WO with rounded plunger, short housing, cable entry M16 x 1.5

- Rounded plunger
- short housing
- Cable entry M16 x 1.5
- 1 pos. driven contact

Approach direction

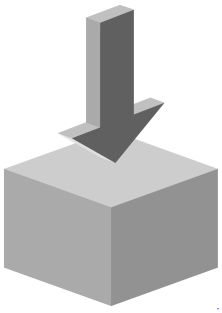

Vertical

Switching element

ES01 Slow-action switching contact 1 positively driven contact

Dimensional drawings

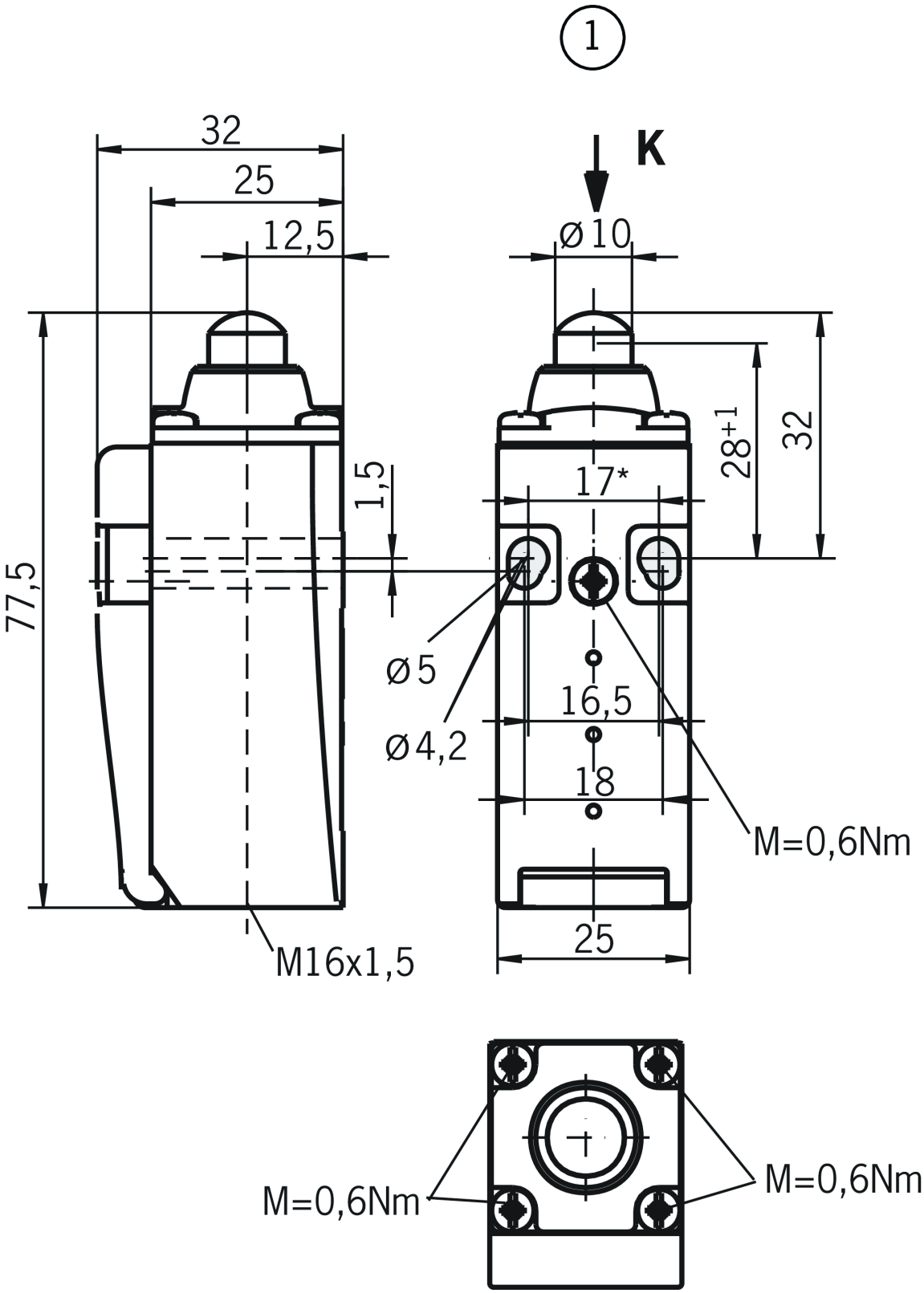

* fixed positioning for safety-related applications (M5)

1 Approach direction

Connection examples

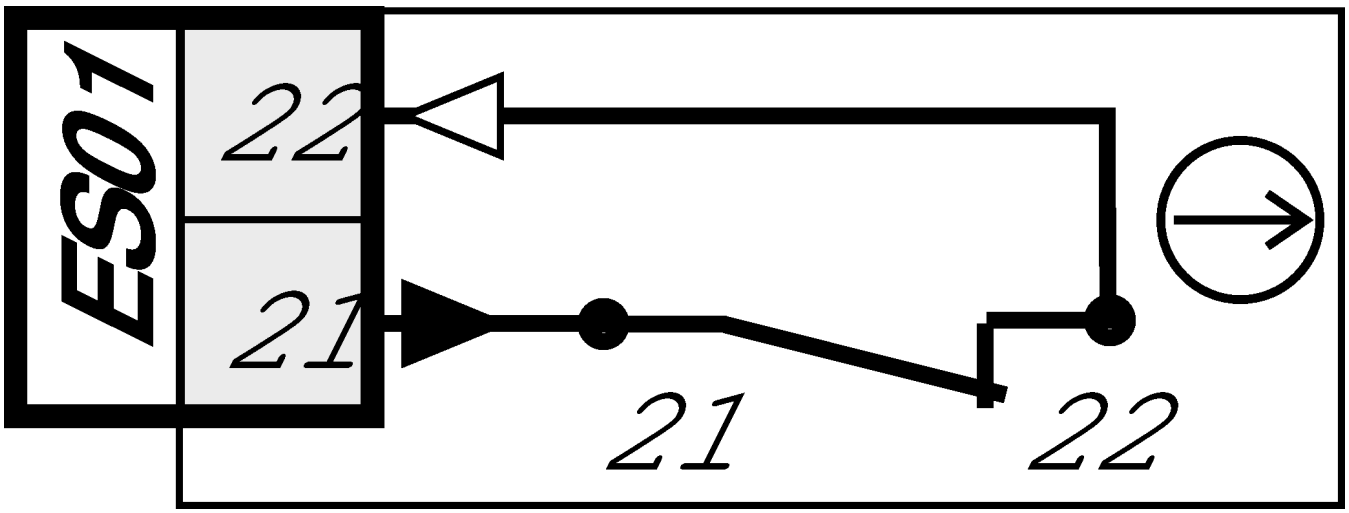

Shift travel diagrams
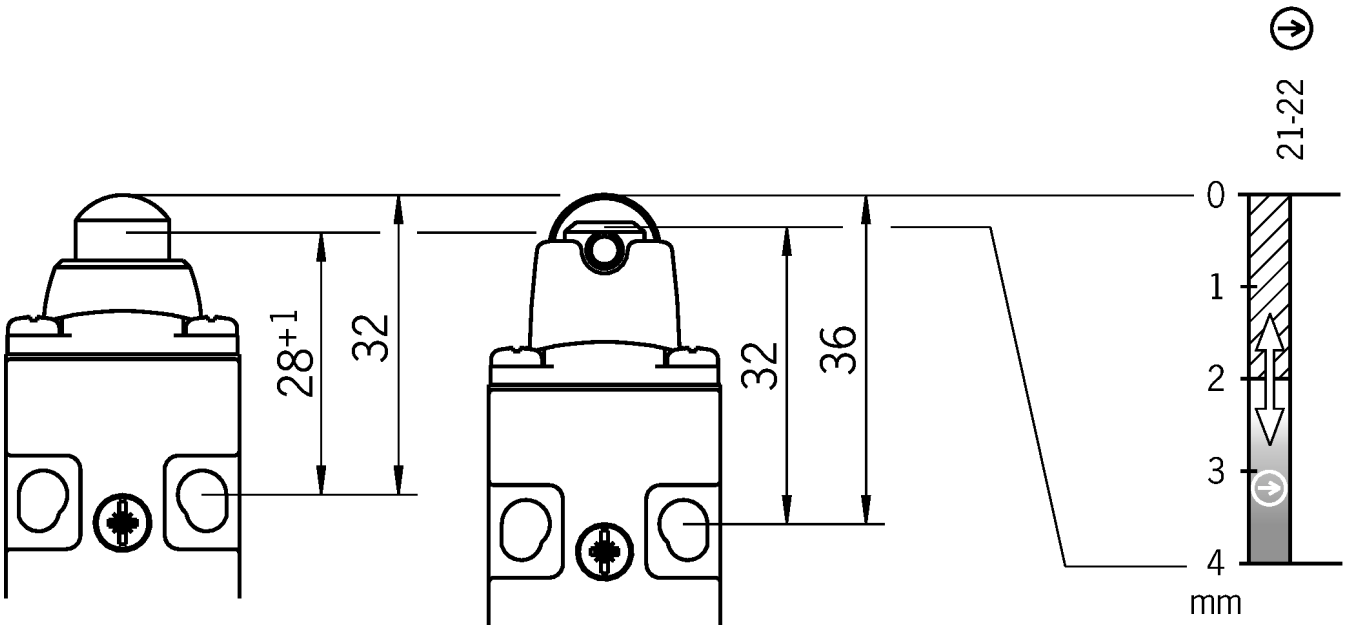
NM...WO **NM...RB** **ES01**