GSBF04R12-502-M (Order no. 085921)

Series GSBF... 12 mm, mechanical

- Plunger spacing 12 mm
- Upright housing
- Degree of protection IP67 according to IEC 60529

Switching element

ES 502 E Snap-action switching contact 1 NC + 1 NO

Dimensional drawings

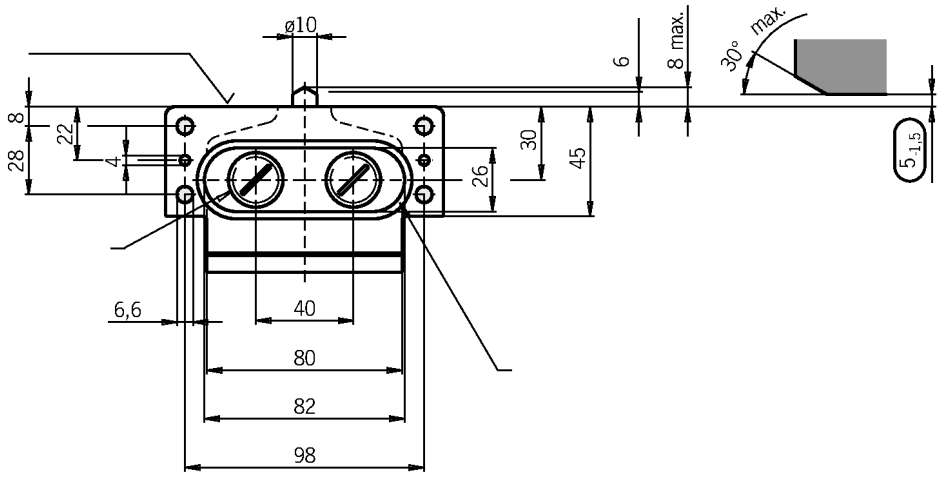

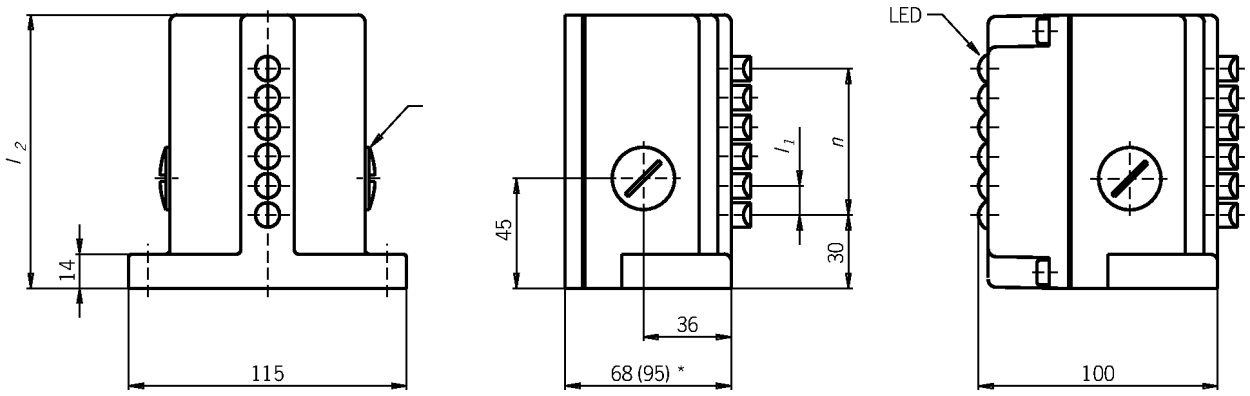

Connection examples

ES 502 E

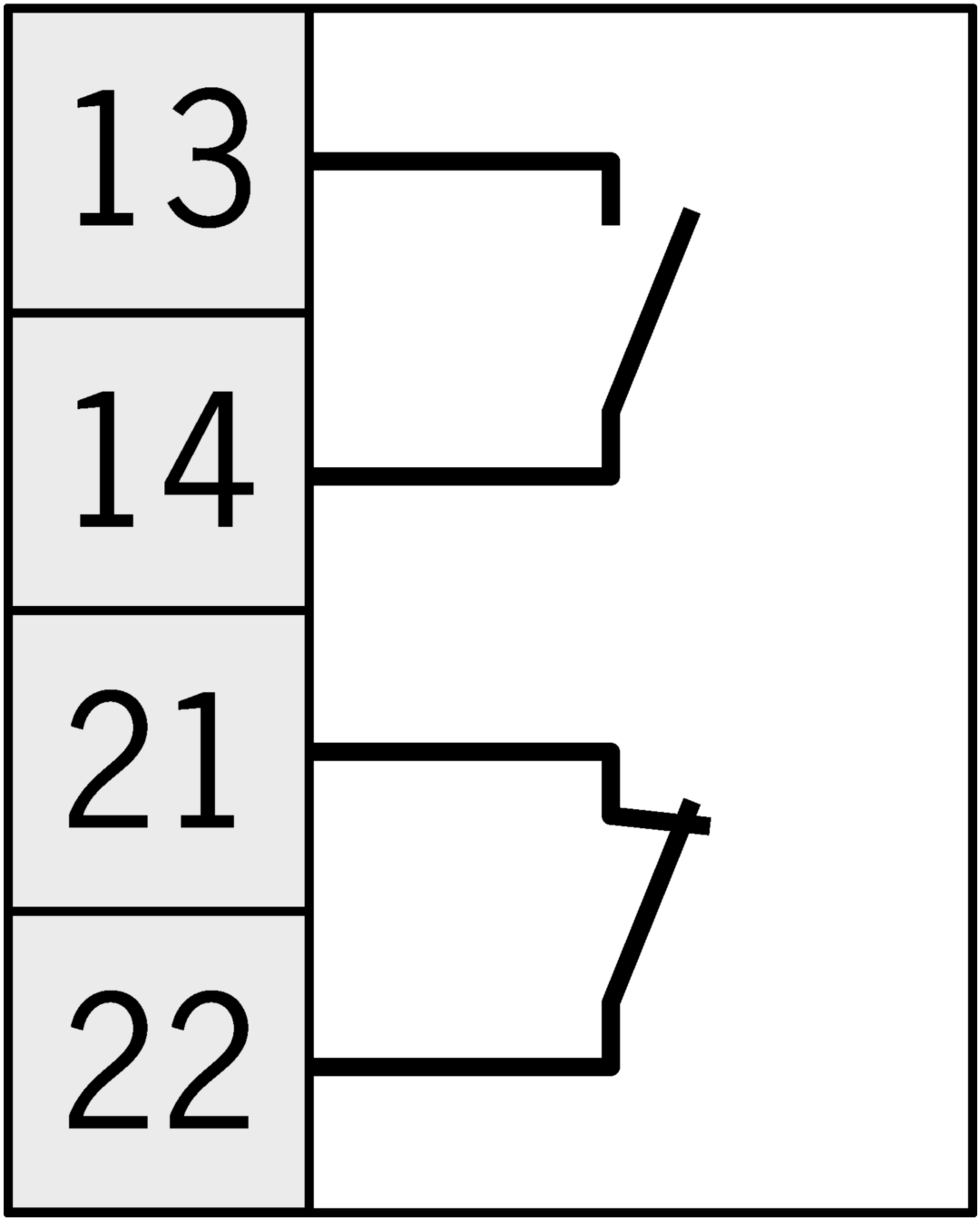

Technical data

Approvals

Electrical connection values

Fuse	max. 8 A gG
Connection cross section	0.34 … 1.5 mm²
Rated insulation voltage U_i	250 V
Rated impulse voltage U_{imp}	2.5 kV
Utilization category	
AC-15	6 A 230 V
DC-13	6 A 24 V
AC-12	8 A 250 V
Switching current	
min. at DC 12V	min. 10 mA
thermal rated current I_{th}	8 A

Mechanical values and environment

Anfahrgeschwindigkeit	0.01 … 80 m/min
Connection type	
4 x	M25 x 1.5
Number NC contacts	4
Number of switching elements	4
Number of NO contacts	4
Design	upright
Actuating element	
Slide bearing	Roller plunger (Operating point accuracy ± 0.01. The reproducible operating point accuracy refers to the axial travel of the plunger after the switching element ES 502 E has been run-in with approx. 2,000 operating cycles.)
Actuating force	min. 20 N