# TP2-528A230M (Order no. 084332)

## Safety switch TP, cable entry M20 x 1.5, without contacts for the door position

- 3 x cable entry M20 x 1.5
- Without contacts for the door position
- Auxiliary release
- Open-circuit current principle

## Approach direction

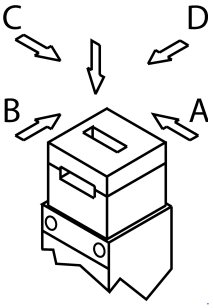


Horizontal and vertical
Can be adjusted in 90° steps
Increased overtravel for horizontal approach direction
If increased play is required when the door is closed, an actuator with overtravel is available. With this actuator the door can move slightly in the actuating direction when closed. This is important, for example, if safety doors have a rubber end stop. Using an actuator with overtravel, the continuous pressure from the compressed rubber can be reduced. In this way the load is reduced on the switch head and the door mechanism.

## Guard locking principle

Open-circuit current (power on to lock): On a guard with guard locking based on the open-circuit current principle, the guard is locked until the power supply to the guard locking solenoid is interrupted. Unlocking is by spring force. The term electrical guard locking is also used.

## Switching element

528 Slow-action switching contact

Contacts for guard locking: 1 positively driven contact + 1 NO contact

## Auxiliary release

The auxiliary release on the front makes it possible to access the machine if there is a malfunction, e.g. a power failure. Unlocking is performed using a tool or a key. The auxiliary release must be protected against misuse (sealing, lacquer).

## Accessories required

Actuator is not included.

## Functional drawings

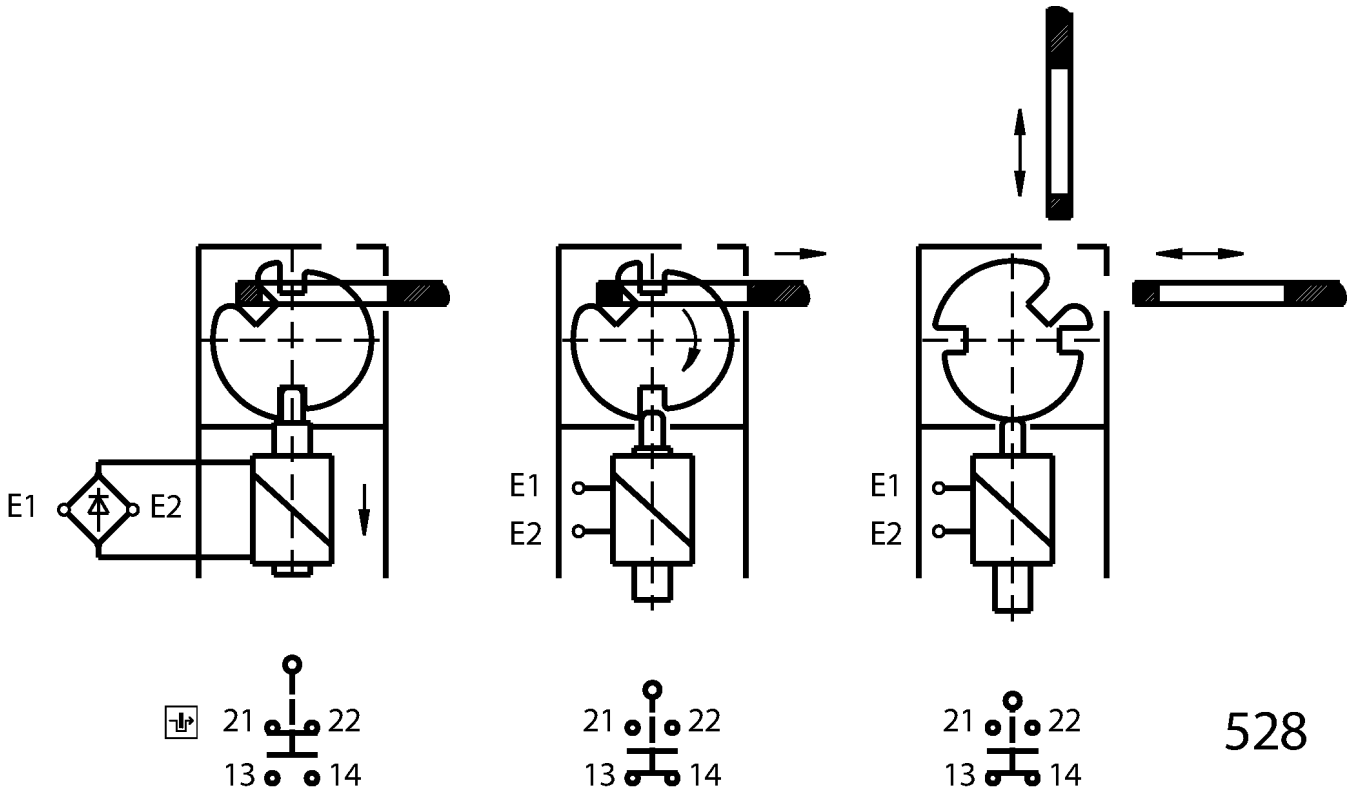

## Dimensional drawings

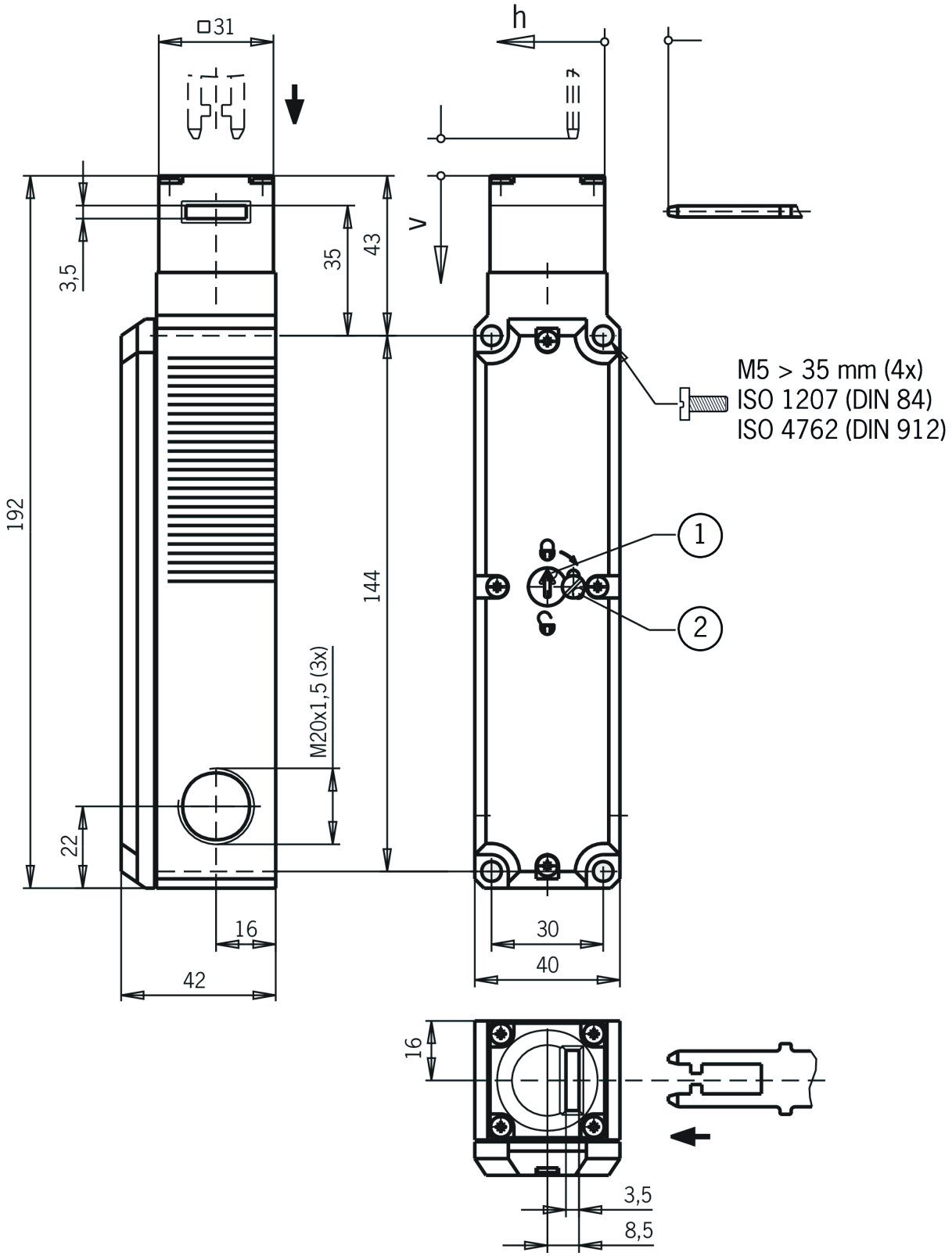


1 Auxiliary release

2 Locking screw