RPS-RS/V5 (Order no. 092496)

Rope set for rope pull switches

- Rope set consisting of thimble and rope clamp

Dimensional drawings

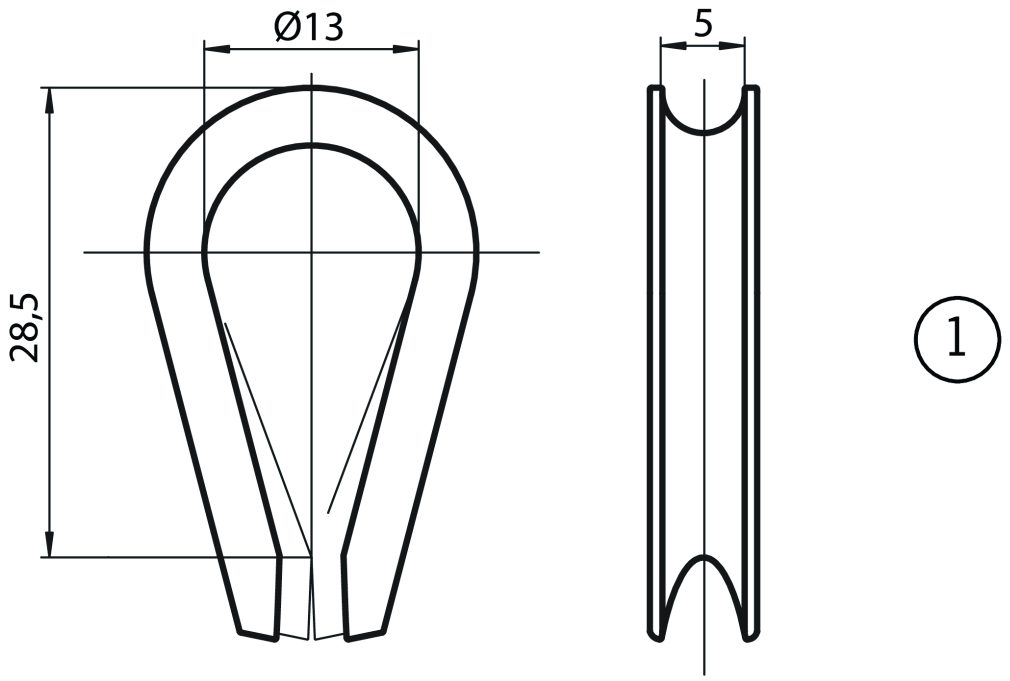

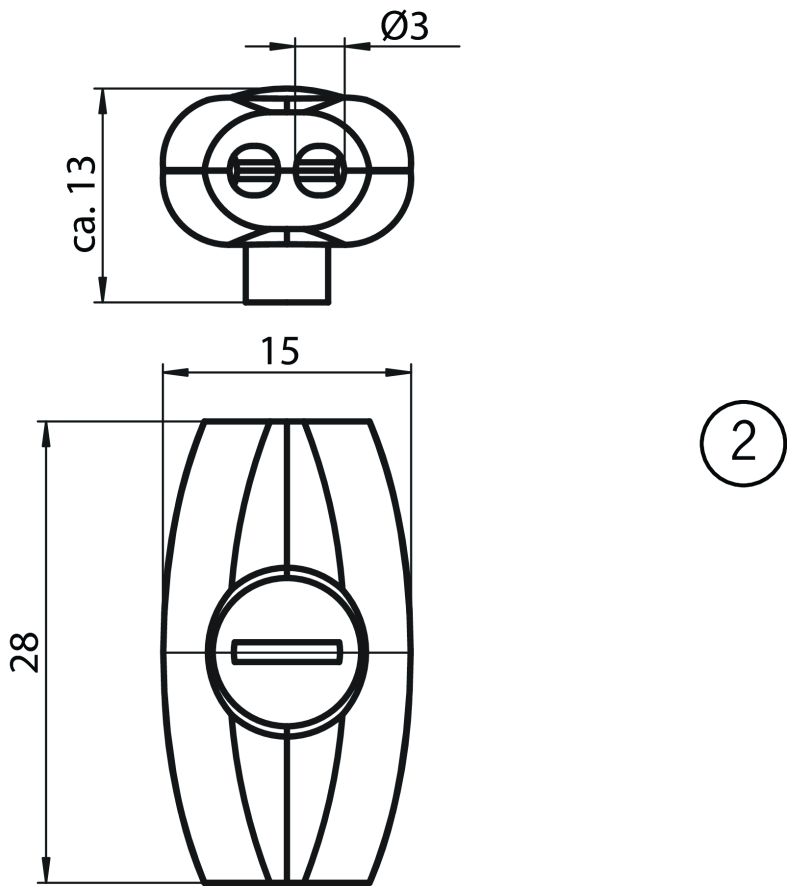

1 Cartridge

2 Rope clamp

Technical data

Mechanical values and environment

Storage temperature	−25 … 70 °C
Rope diameter	3 mm
Material	Galvanized steel