AC-MC-SB-F-A-157028 (Order no. 157028)

Module connector MLI (M12), 5-pin, socket

- Module plug connector MLI (M12), straight
- with thread
- Number of pins: 5-pin, socket

Dimensional drawings

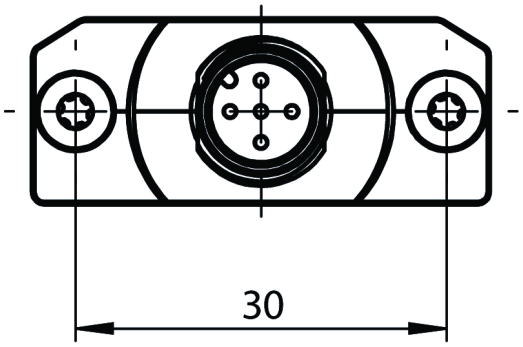

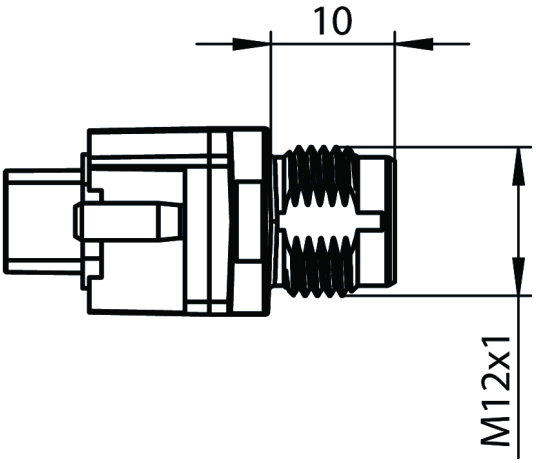

Dimensional drawings

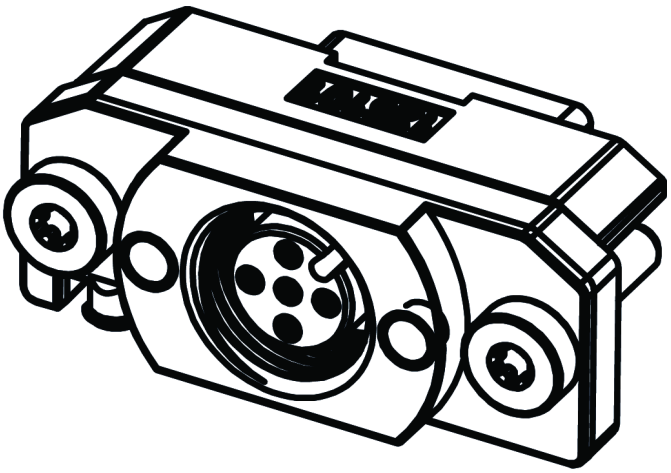

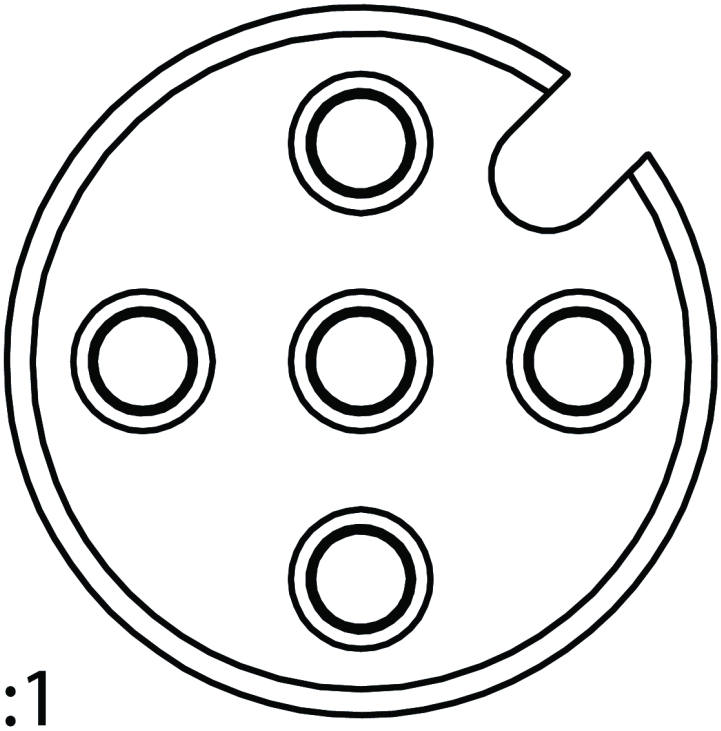

5:1

Technical data

Electrical connection values

Connecting cable	
MLI	5-pin, M12x1
Rated voltage	36 V
Rated voltage	30 V
Nominal current	
at 40 °C	4 A
Degree of contamination according to EN 60664-1	3

Mechanical values and environment

Storage temperature	-30 … 70 °C
Ambient temperature	-30 … 55 °C
	Connection 1
Connection type	2x M4 screws
Connection type	Female plug
Number of pins	5
Degree of protection	IP65 (Only in the screwed tight state with the related mating components.)
Insertion cycles	100
Material	
Plug housing	Plastic
	Connection 2
Connection type	Screw terminal
Connection type	Female plug
Type specification	M12 EN 61076-2-101
Number of pins	5
Degree of protection	IP65 (Only in the screwed tight state with the related mating components.)
Insertion cycles	100