TZ2RE220MVAB (Order no. 088028)

Safety switch TZ, cable entry M20 x 1.5

- Cable entry M20 x 1.5
- Auxiliary release
- LED indicator
- Actuating head fitted right
- Open-circuit current principle

Approach direction

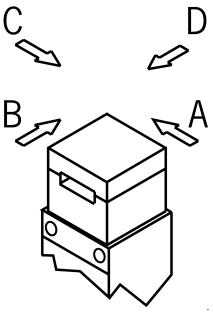

Horizontal
Can be adjusted in 90° steps

Guard locking principle

Open-circuit current (power on to lock): On a guard with guard locking based on the open-circuit current principle, the guard is locked until the power supply to the guard locking solenoid is interrupted. Unlocking is by spring force. The term electrical guard locking is also used.

LED indicator

The switch has two freely assignable LED indicators (red and green).

Switching element

SK 2131 Slow-action switching contact

Contacts for door monitoring: 3 positively driven contacts + 1 NO contact

ÜK 3131 Slow-action switching contact

Contacts for guard locking: 2 positively driven contacts + 2 NO contact

Auxiliary release

The auxiliary release on the front makes it possible to access the machine if there is a malfunction, e.g. a power failure. Unlocking is performed using a tool or a key. The auxiliary release must be protected against misuse (sealing, lacquer).

Accessories required

Actuator is not included.

Functional drawings

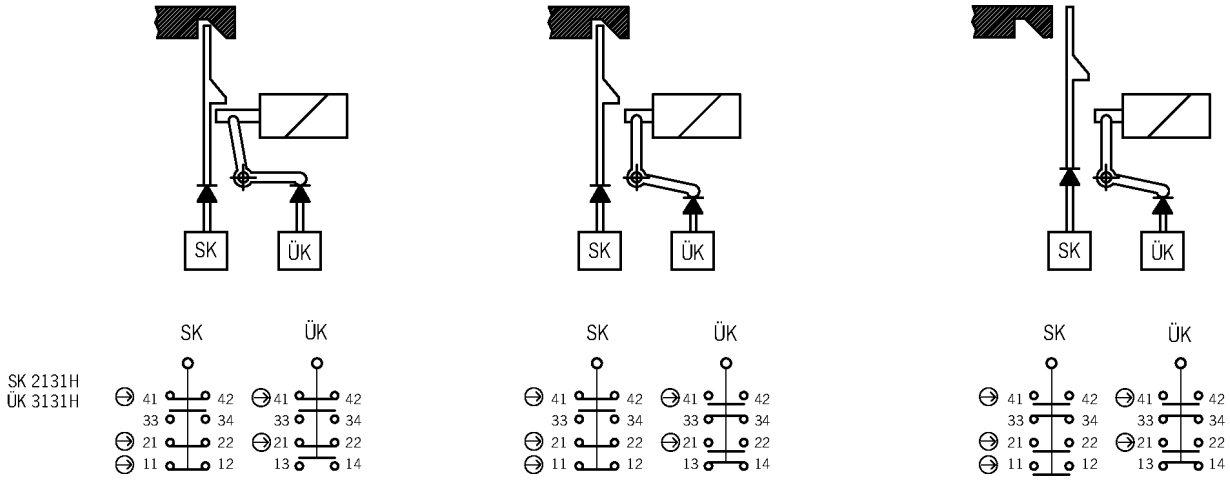

Dimensional drawings

TZ.L...

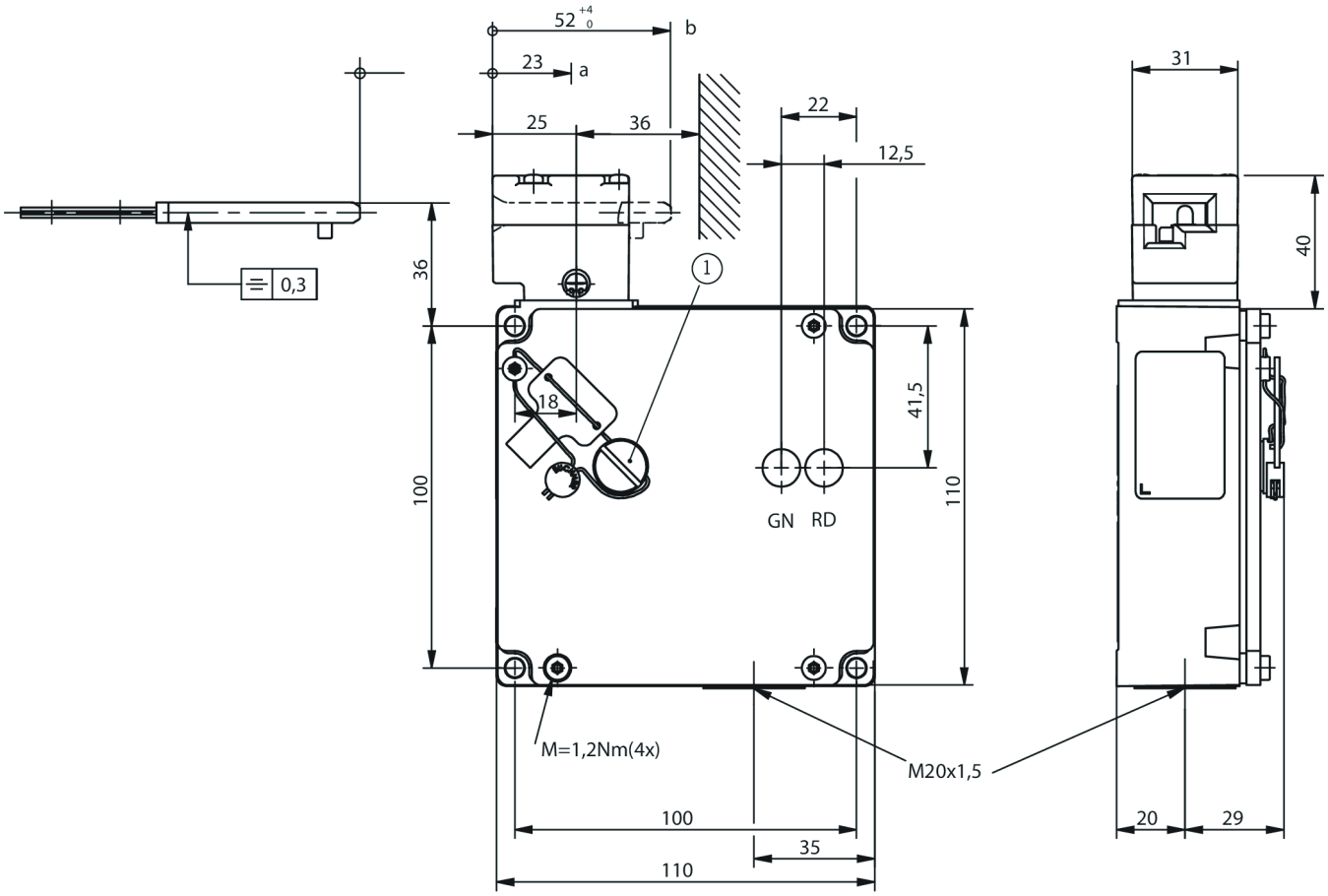

TZ.R...

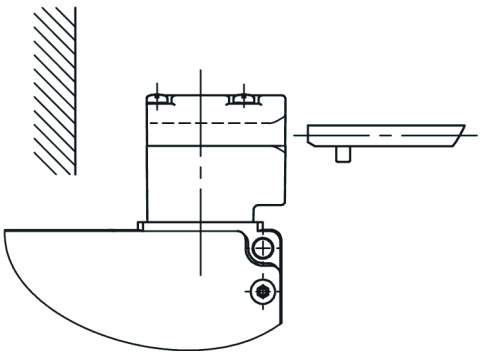

1 Auxiliary release