C-M08F04-04X025PV02,0-ES-084641 (Order no. 084641)

Connecting cable with plug connector M8, 4-pin, 2 m

- M8 female plug, 4-pin
- Straight plug connector
- PVC cable
- Cable length 2 m
- With flying lead
- Knurled nut electrically connected to cable shield

Dimensional drawings

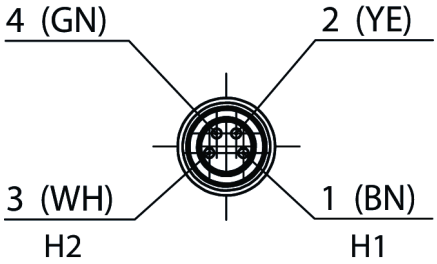

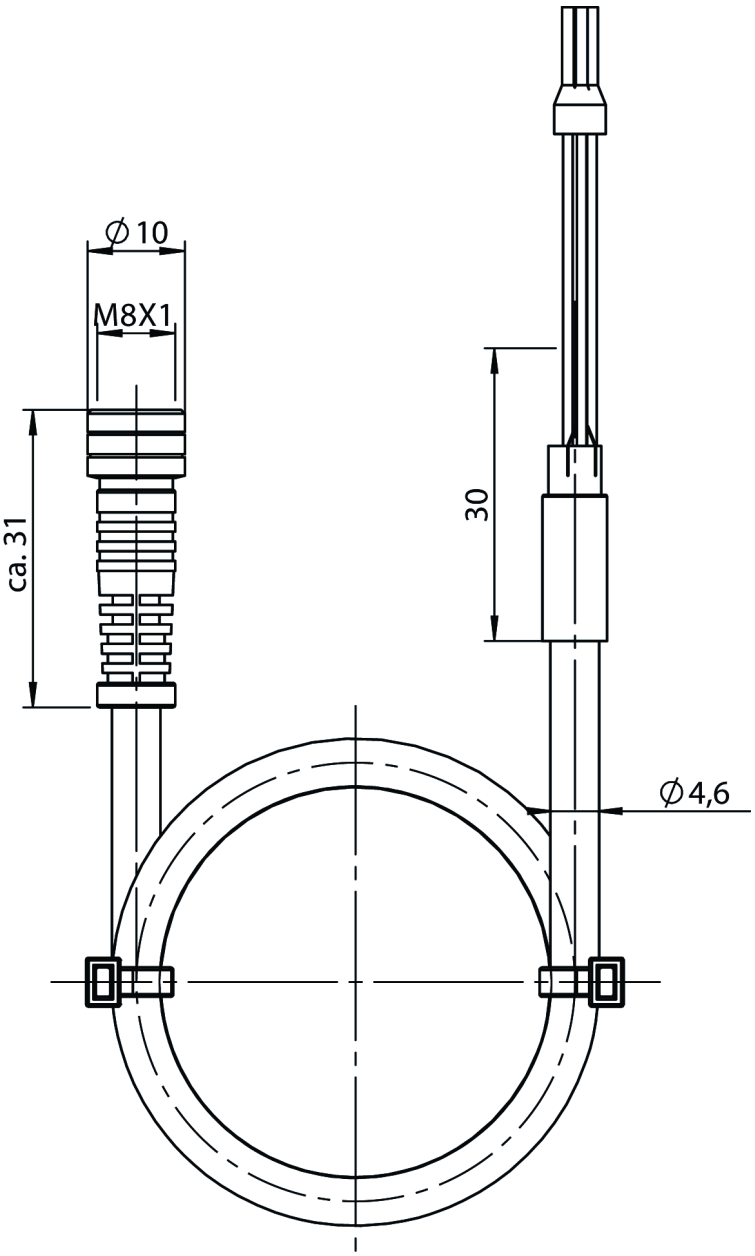

Technical data

Approvals

UL LISTED c UL us LISTED

Electrical connection values

Rated impulse voltage U_{imp}	0.8 kV
Test voltage	0.65 kV
Cable shielding	Yes (Cu braid, coverage approx. 85%, connected to union nut)

Mechanical values and environment

Conductor identification	Color code
Conductor cross-section	0.25 mm²
Number of conductors	4
Dynamic bending radius	10 x cable diameter
Static bending radius	5 x cable diameter
Storage temperature	-25 ... 80 °C
Cable type	straight
Cable diameter	
approx.	5 mm
Cable length	2 m
Drag chain suitability	No
Cable ambient temperature (dynamic)	-5 ... 70 °C
Cable ambient temperature (static)	-25 ... 80 °C
Material	
Sheath	PVC
	Connection 2
Conductor end	Cable end sleeve with insulating collar
Connection type	flying lead
	Connection 1
Connection type	Plug connector M8

Connection type	Female plug
Tightening torque	0.4 Nm
Cable outlet	straight
Number of pins	4
Degree of protection	IP65/IP67 (in the inserted state)
Plug lock	Screw connection
Material	
Plug housing	TPU