AE-M-A1-99877 (Order no. 099877)

Emergency release for safety switch CTP/CTA/TP/STP/MGB2

It is used for manual release of the guard locking without tools in an emergency. The emergency unlocking mechanism must be returned to the locked state manually. Sealing can be fitted to protect against tampering.
Attention: Prior to mounting, the locking screw for the auxiliary release must be removed.

Dimensional drawings

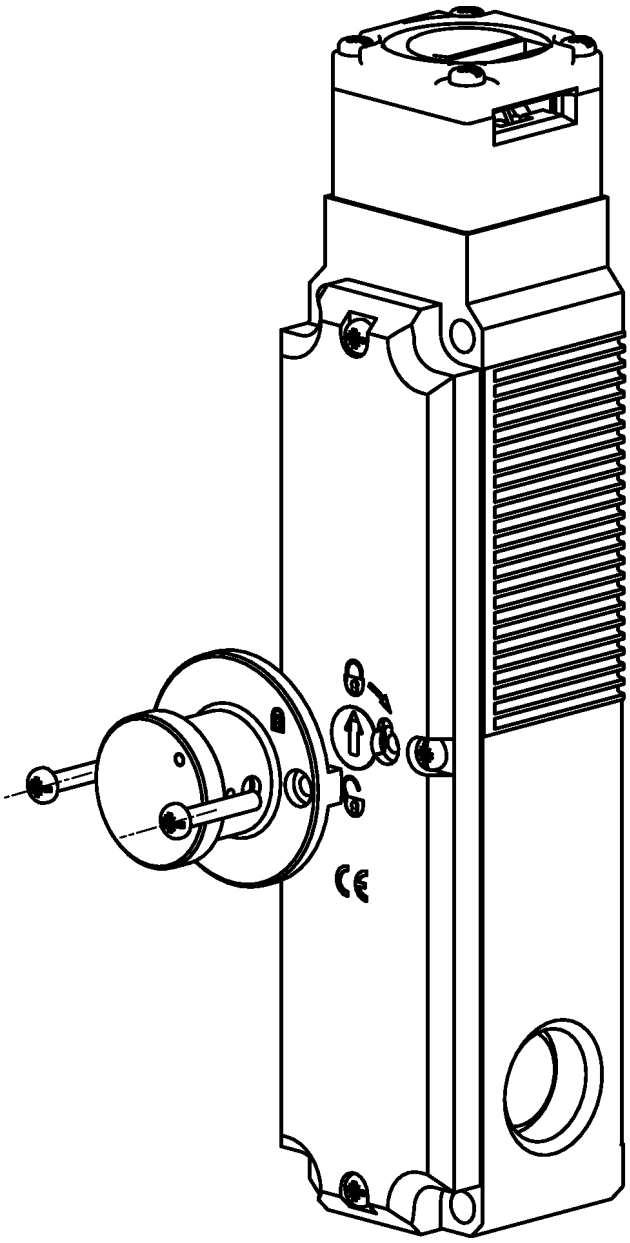

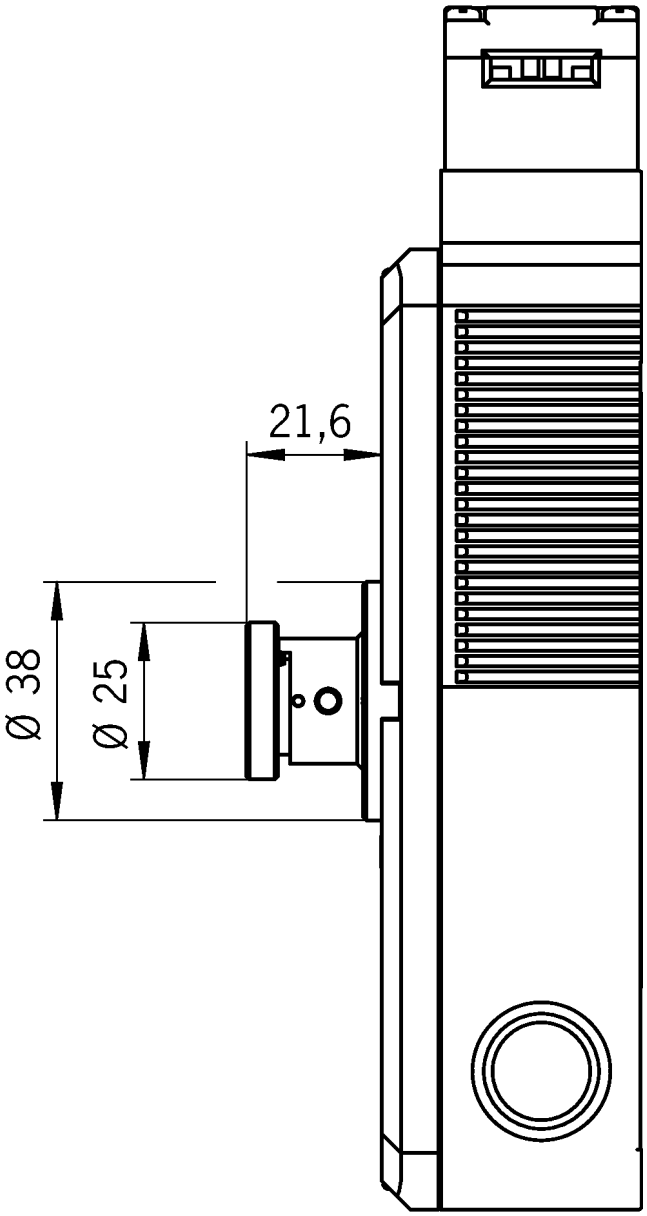

Technical data

Mechanical values and environment

Storage temperature	−25 … 70 °C
Material	Aluminum

Miscellaneous

Detent mechanism	Yes