MGB-L1HE-ARA-L-110690 (Order no. 110690)

Locking set MGB-L1HE-ARA... (guard locking by spring force) with 2 pushbuttons, emergency stop, incl. label carrier, RC18

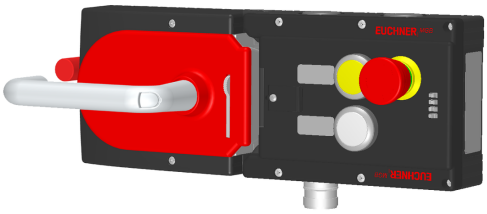

- Guard locking with guard lock monitoring
- Can be connected in series with other AR devices (e.g. CES-AR and CET-AR)
- Emergency stop according to ISO 13850
- 2 pushbuttons (illuminated, ye, wh)
- incl. adhesive labels
- With plug connector RC18
- With escape release
- Unicode
- Release monitoring

Guard locking type

MGB-L1...	The locking arm is held in the locked position by spring force and is unlocked by solenoid force (closed-circuit current principle, mechanically locked).

Door hinge

A mechanical door stop is permanently integrated into the evaluation module of the MGB. A marking on the stop makes adjustment easier.

LED indicator

The LED indicator indicates all important system and status information.

Monitoring outputs

OT Bolt tongue inserted into the evaluation module

OI Diagnostics; there is a fault

Emergency stop device

S1 2 positively driven contacts, emergency stop with turn-to-reset, not illuminated

Pushbuttons

S2 1 NO contact, yellow, illuminated

S3 1 NO contact, white, illuminated

Adhesive labels

Devices with adhesive labels have pre-formed recesses. The adhesive labels enclosed (standard size 12.5 x 27 mm) can be affixed in these recesses.

Escape release

The escape release enables people accidentally shut in to open the guard locked door from the danger zone.

Dimensional drawings

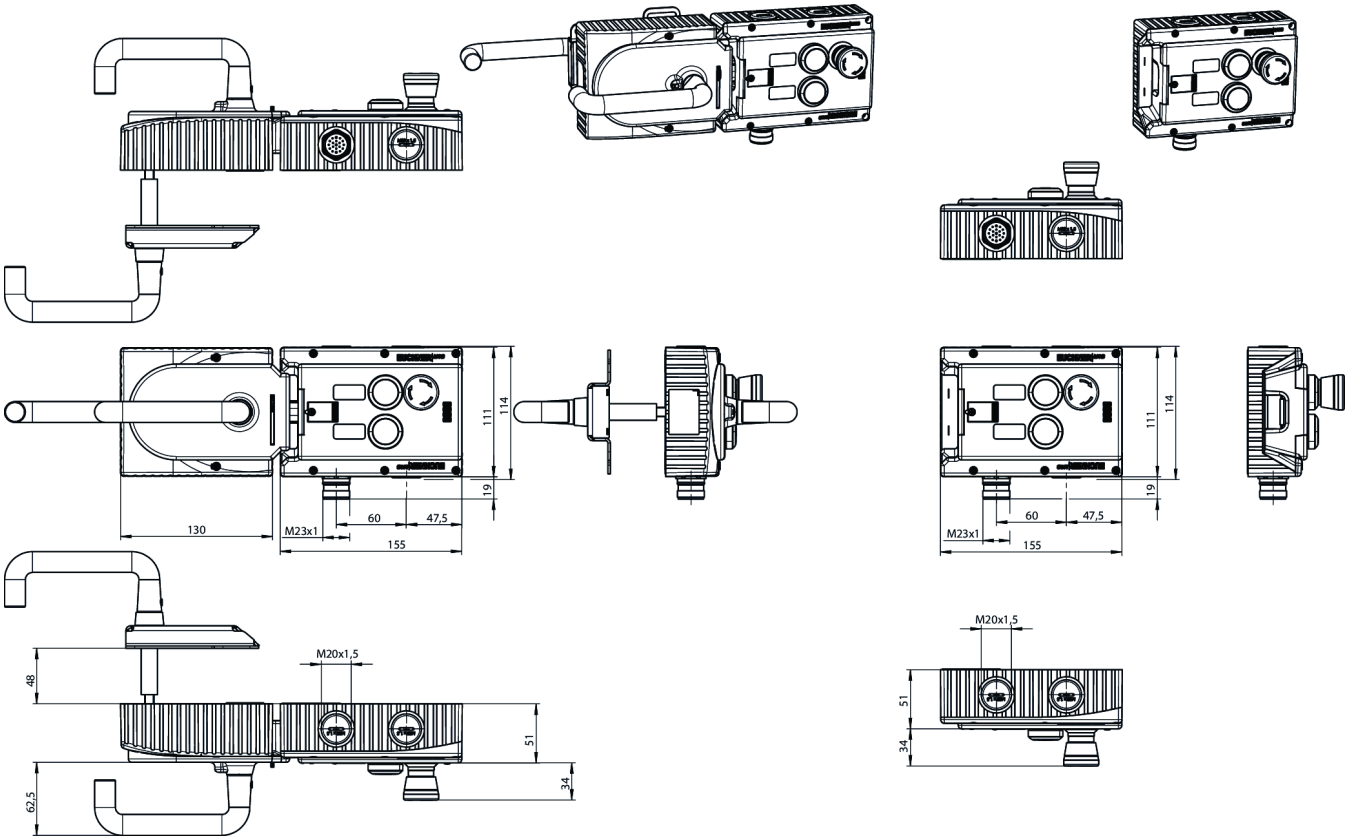
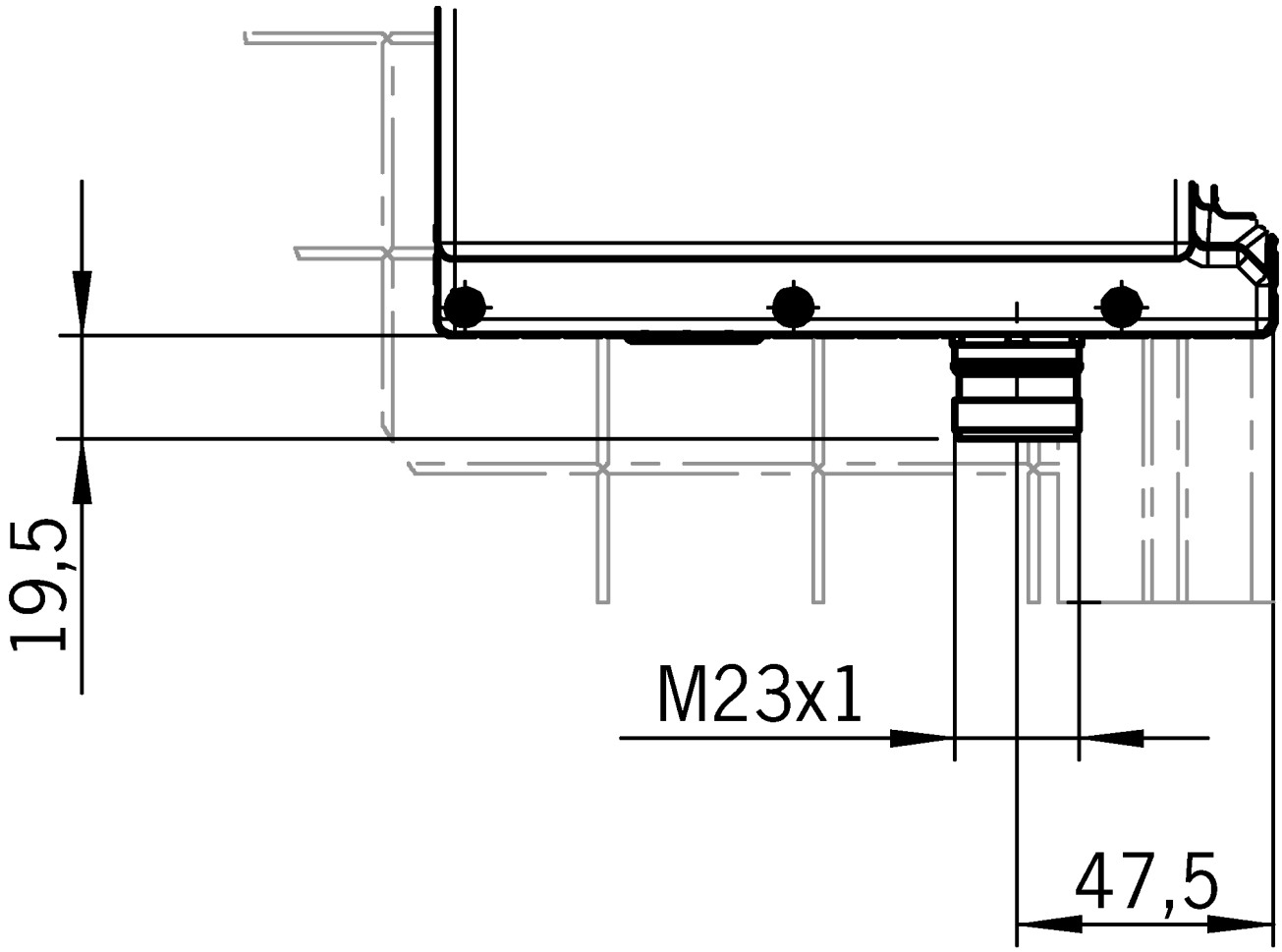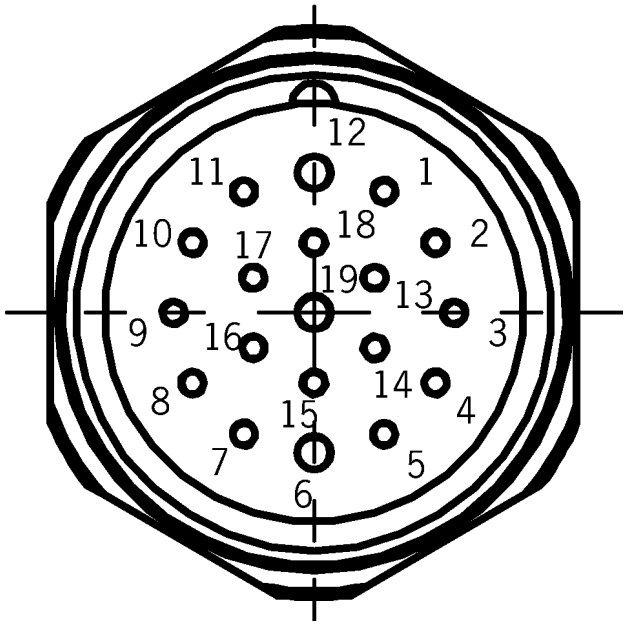
Dimensional drawings