N10R-M (Order no. 086294)

Precision single limit switch N10, roller plunger

- Plunger material stainless steel

Similar to figure

Dimensional drawings

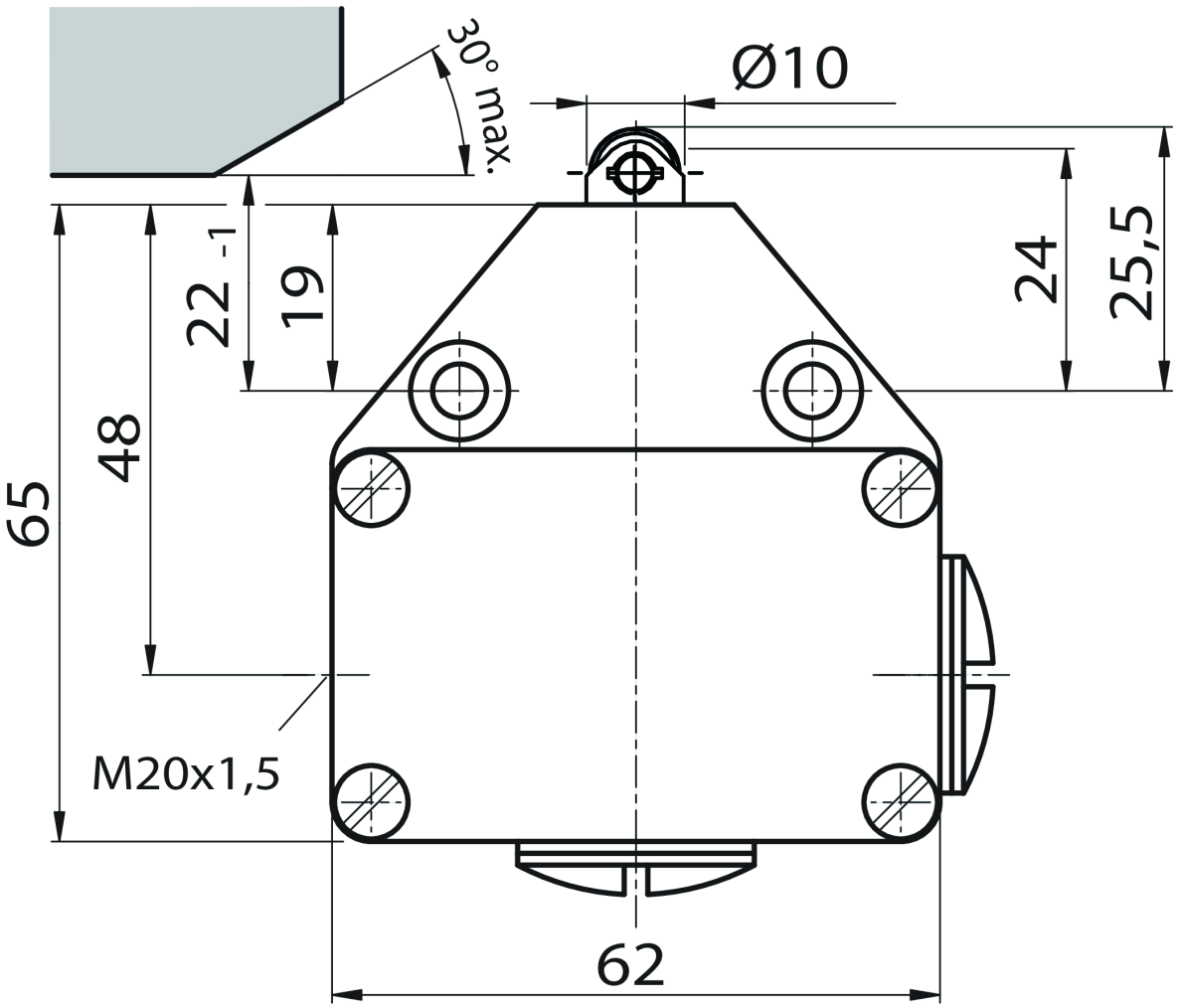

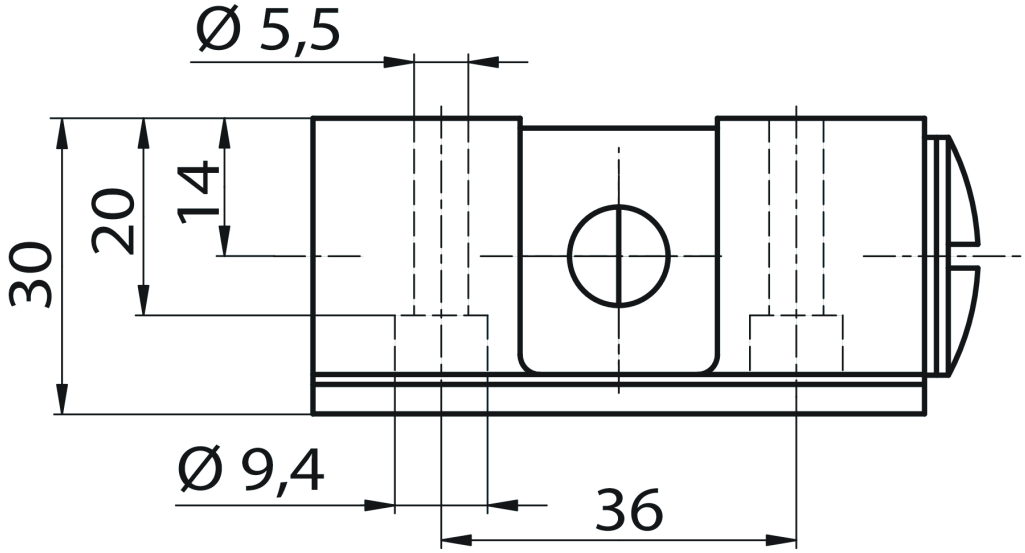
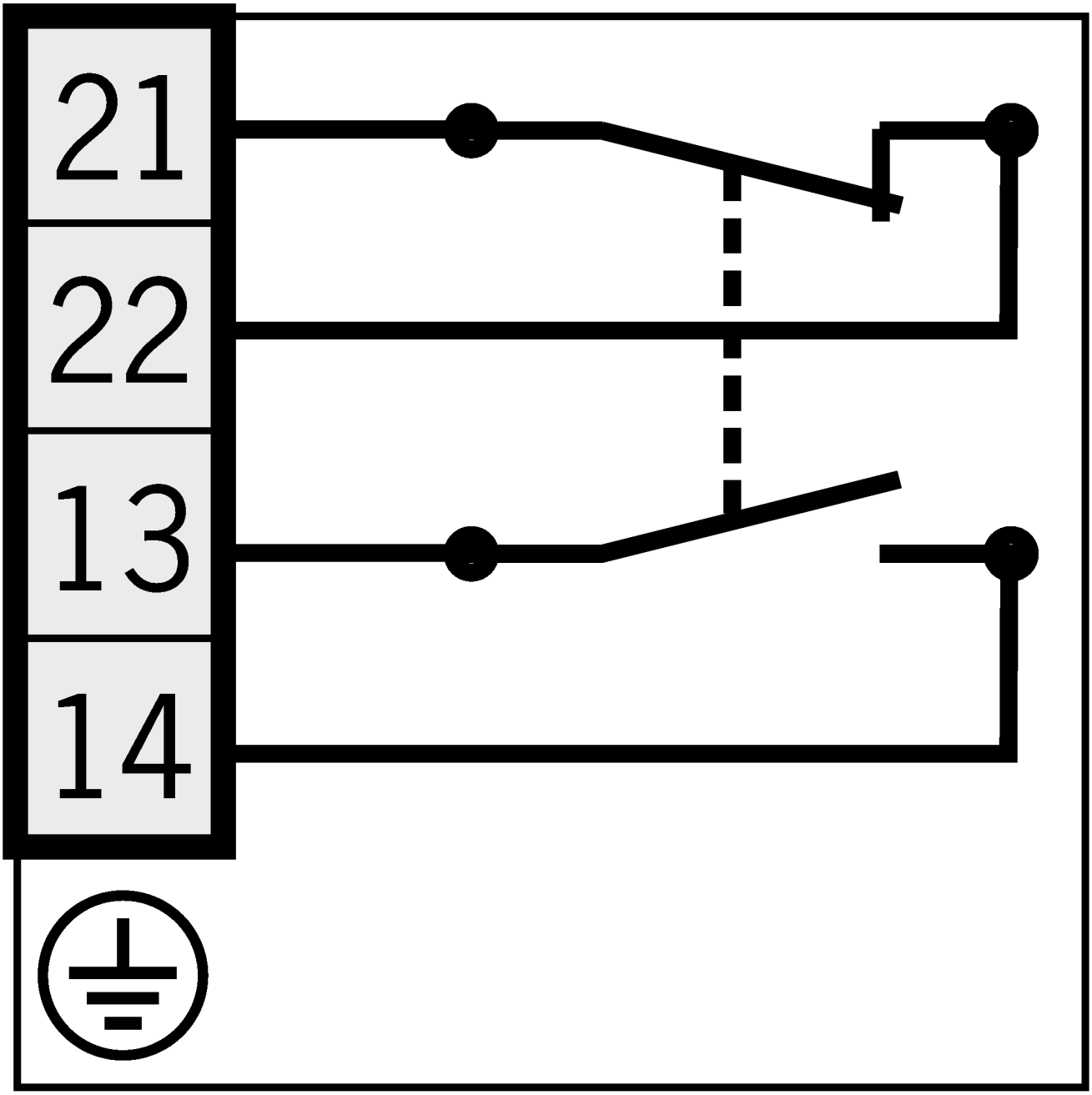
Connection examples