MGB-L1HE-ARA-R-111364 (Order no. 111364)

Dimensional drawings

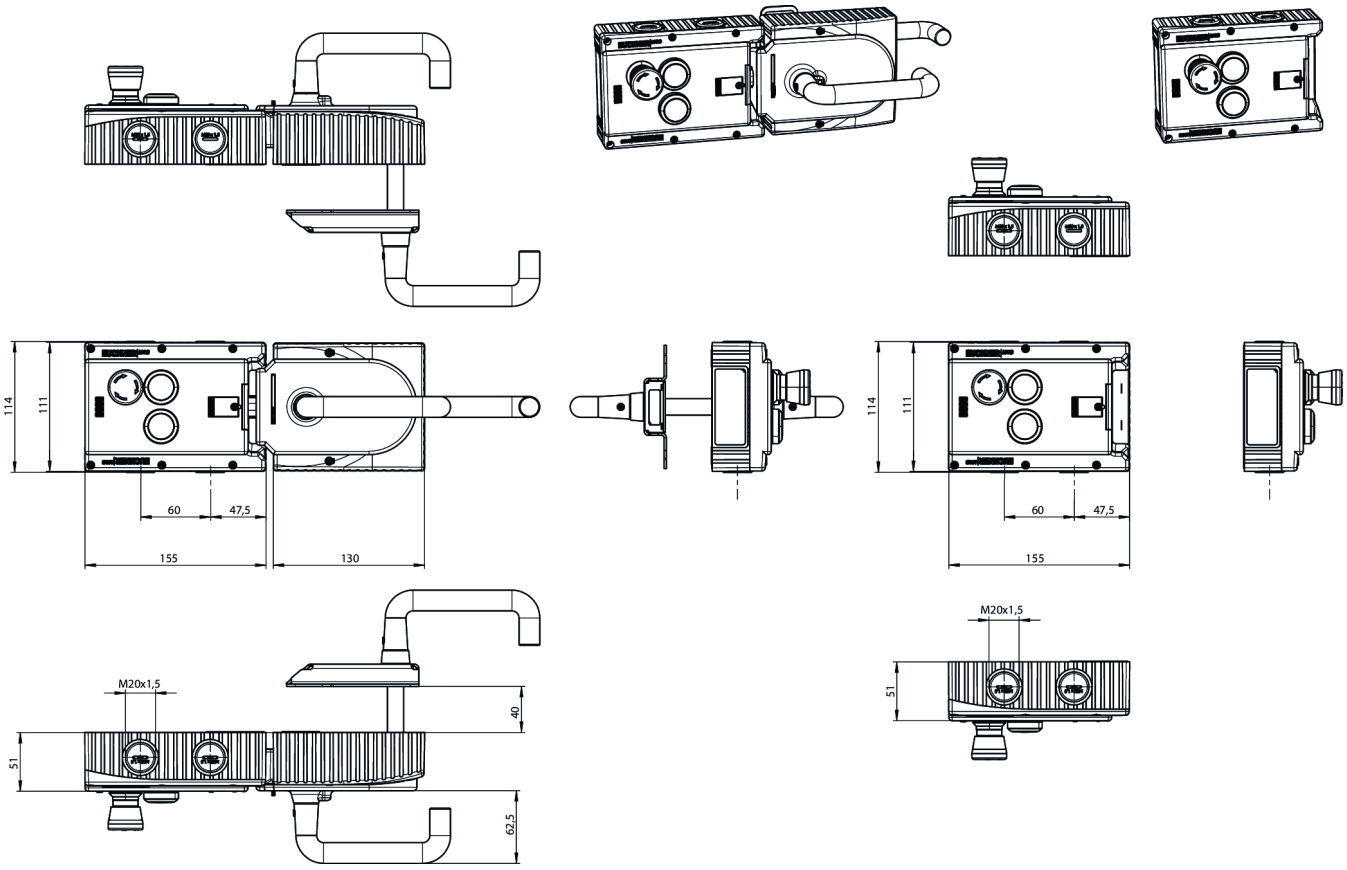

Technical data

Approvals

Mechanical values and environment

Installation orientation	Door hinge DIN right
Storage temperature	−25 … 70 °C
Degree of protection	IP65
Ambient temperature	−20 … 55 °C
Material	
Housing	Fiber glass reinforced plastic, nickel−plated die−cast zinc, stainless steel

Miscellaneous

Product version number	V3.0.0
Additional feature	with black cover

Operating and display elements

Occupancy diagram	L1

Item	Color	Extras	Note slide−in label	Version	Switching element	Slide−in label	Number	Designation1	LED
1		with monitoring contact		Emergency stop	2 PD + 1 NO				
2	white	printed		Illuminated pushbutton	1NO				
3	white	printed		Illuminated pushbutton	1NO				

Electrical connection values

Connection cross section	
	0.25 … 0.75 mm²

(rigid/flexible) with cable end sleeve with collar according to DIN 46 228/1	
(rigid/flexible) with cable end sleeve according to DIN 46 228/1	0.25 … 1.5 mm^2
(rigid/flexible)	0.13 … 1.5 mm^2 ((AWG 24 … AWG 16))
Rated insulation voltage U_i	30 V
Rated impulse voltage U_{imp}	1.5 kV
Discrepancy time	
between FO1A and FO1B	max. 10 ms
Utilization category	
DC-13	24V 200mA (Caution: outputs must be protected with a free-wheeling diode in case of inductive loads.)
Risk time according to EN 60947-5-3	max. 350 ms
Risk time according to EN 60947-5-3, extension for each additional device	max. 5 ms
Safety class	III
Transponder coding	Unicode
Degree of contamination (external, according to EN 60947-1)	3
	Solenoid control input IMP1, IMP2, IMM
Test pulse duration	max. 5 ms
Test pulse interval	min. 100 ms
	Controls and indicators
Breaking capacity	max. 0.25 W
Switching voltage	U_A V
Switching current	1 … 10 mA
LED power supply	24 V DC
	Emergency stop
Breaking capacity	max. 0.25 W
Switching voltage	5 … 24 V
Switching current	1 … 100 mA
LED power supply	24 V DC