C-M23F19-19XDIFPU08,0-MA-077015 (Order no. 077015)

Connecting cable with plug connector M23 with option C1825, 8 m, straight

- M23 plug connector, 18-pin + PE
- Straight plug connector
- PUR cable
- Cable length 8 m
- With flying lead
- Cores color-coded

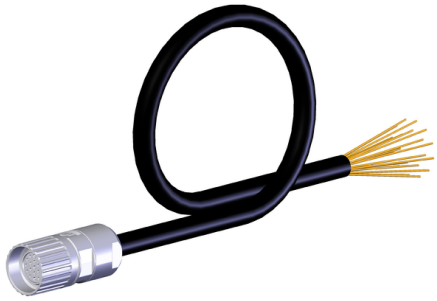

Connector assignment

Plug connector (view of connection side)	Pin	Cross-section	Conductor coloring
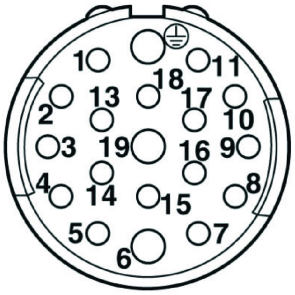	1	0.5 mm²	VT
	2	0.5 mm²	RD
	3	0.5 mm²	GY
	4	0.5 mm²	RDBU
	5	0.5 mm²	GN
	6	1.0 mm²	BU
	7	0.5 mm²	GYPK
	8	0.5 mm²	GNWH
	9	0.5 mm²	YEWH
	10	0.5 mm²	GYWH
	11	0.5 mm²	BK
	12	1.0 mm²	GNYE
	13	0.5 mm²	PK
	14	0.5 mm²	BNGY
	15	0.5 mm²	BNYE
	16	0.5 mm²	BNGN
	17	0.5 mm²	WH
	18	0.5 mm²	YE
	19	1.0 mm²	BN

Dimensional drawings

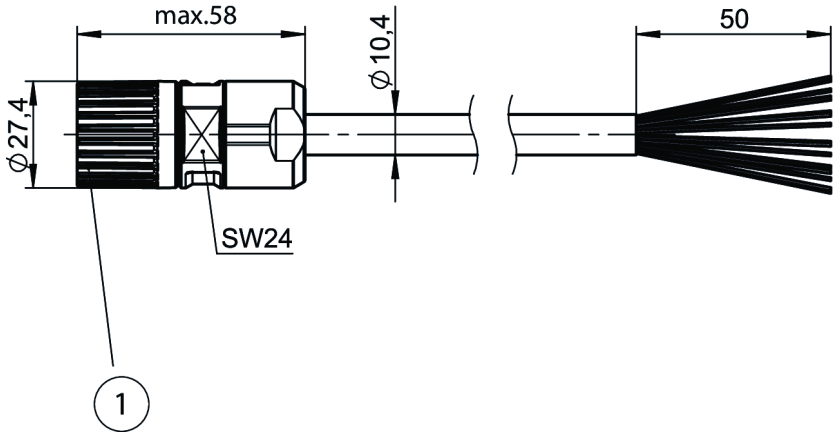

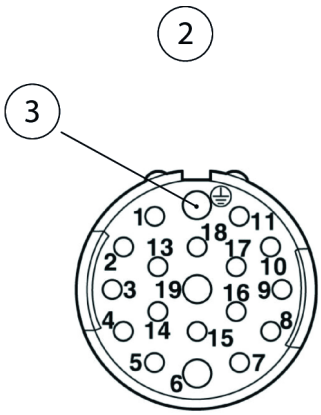

1 Female plug with union nut M23, 19-pin.

2 Terminal assignment as seen from the plug side

3 PE with shield spring

Technical data

Approvals

UL LISTED

Electrical connection values

Rated voltage	150 V
Test voltage	1.5 kV
Overvoltage category according to IEC EN 60664-1	II
	Connection 1
Degree of contamination according to EN 60664-1	3

Mechanical values and environment

Conductor identification	Color code
Conductor cross-section	16 x 0.5 mm^2 / 3 x 1 mm^2
Number of conductors	19
Dynamic bending radius	10x cable diameter
Fire behavior	flame retardant according to DIN EN 60332-1-2
Storage temperature	-25 ... 80 °C
Cable type	straight
Cable diameter	
approx.	10.4 mm
Cable length	8 m
Sheath color	black
Drag chain suitability	Yes
Cable ambient temperature (dynamic)	-20 ... 80 °C
Cable ambient temperature (static)	-20 ... 80 °C