# NG2HB-510SVM5C1883 (Order no. 086561)

## Position switch NG.HB, plastic roller, plug connector SVM5

- Roller lever arm HB (plastic roller)
- M12 connector and pin assignment for LED indicator (pin 3 not used)

### Switching element

510 Snap-action switching contact 1 NC + 1 NO

## Dimensional drawings

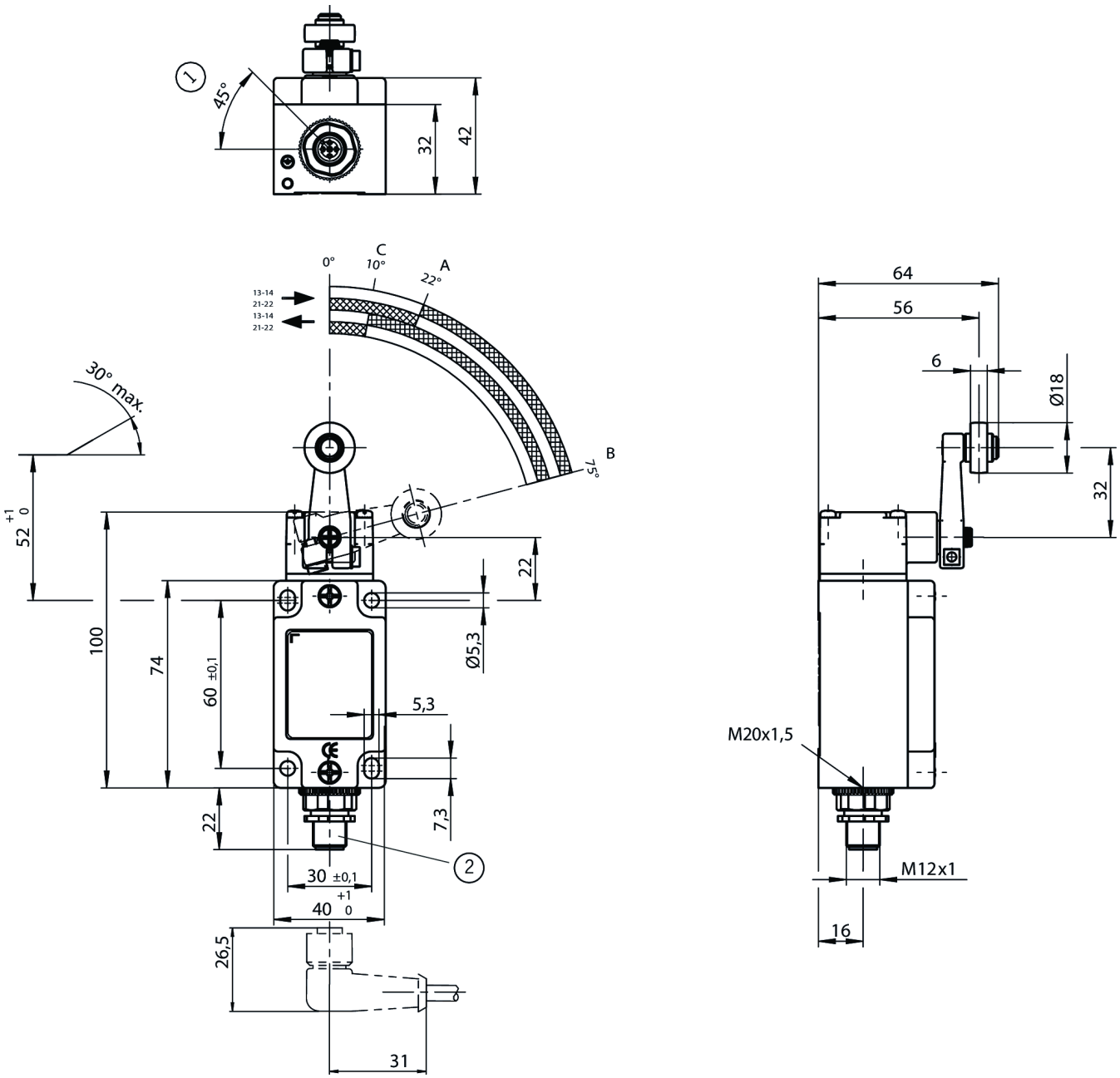


1 Guide lug aligned

2 Male socket adjustable (max. 270°)

A Operating point

B End position

C Reset point
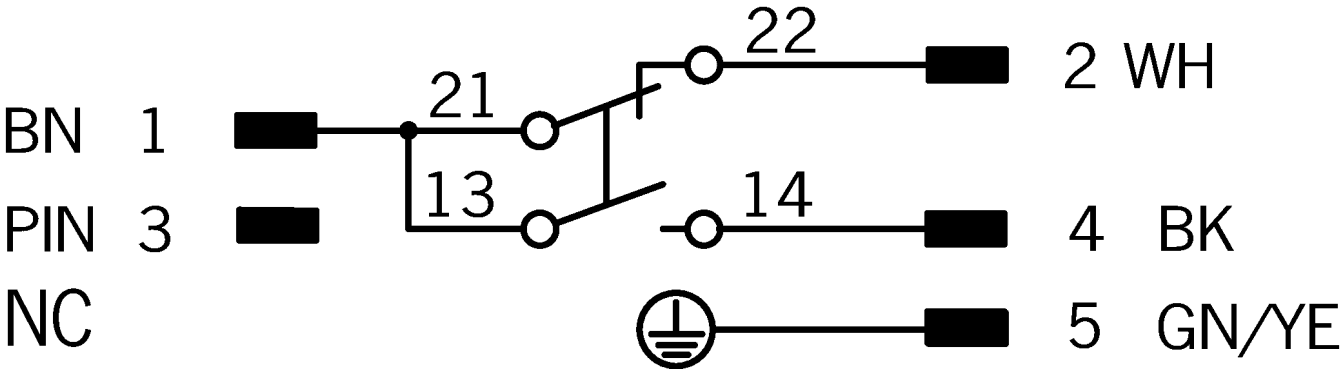
## Connection examples