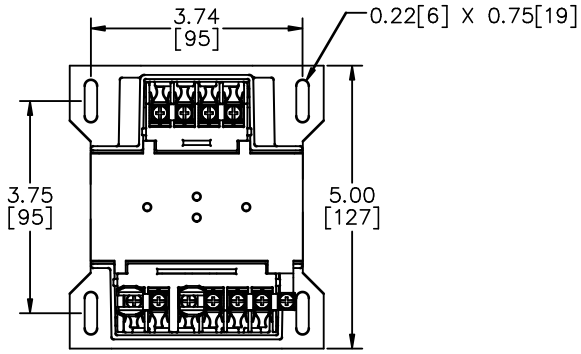

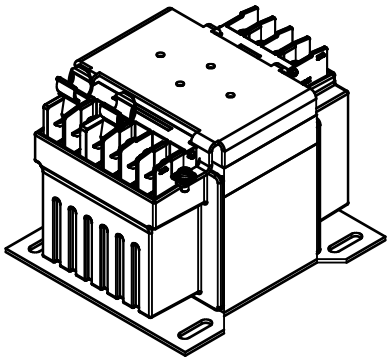

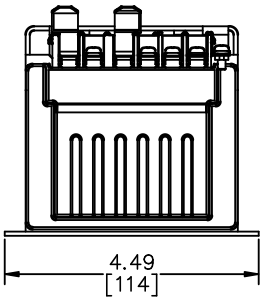

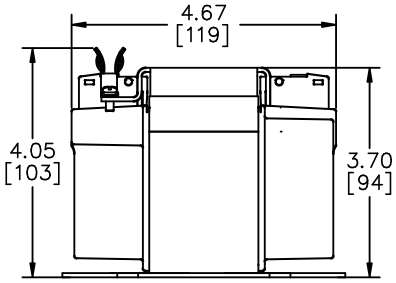

- FINGER GUARDS FOR TERMINAL BLOCKS AND FUSING OPTIONAL
- OPTIONAL FINGER GUARDS WILL ADD 0.1"[3mm] TO HEIGHT
- OPTIONAL FUSE BLOCK WILL ADD 1.3"[33mm] TO HEIGHT
- OPTIONAL FUSE BLOCK WITH FINGER GUARD WILL ADD 1.5"[38mm] TO HEIGHT
- TOLERANCES STD. +/- 0.1"[+/-3mm]
- ALL DIMENSIONS ARE IN INCHES [mm]

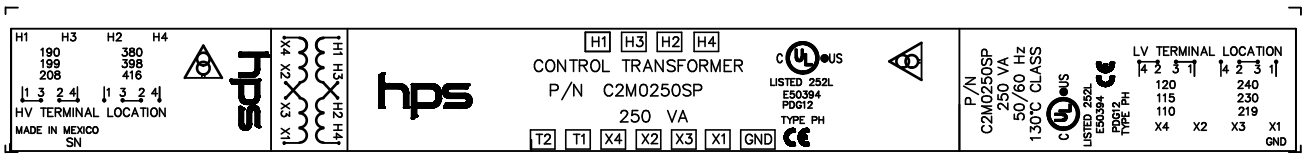

NOTES:

THIS DRAWING CONTAINS STRICKLY CONFIDENTIAL INFORMATION BELONGING TO HAMMOND POWER SOLUTIONS AND MUST NOT BE DISTRIBUTED OUTSIDE AUTHORIZED PARTIES.

hammond POWER SOLUTIONS

TITLE: 1 PHASE MOLDED CONTROL TFX

NO.	DATE	BY	REVISION
1	25/09/16	RH	UPDATED EDB

DES: MSARAF
DATE: 25/06/30
SCALE: NTS

SHEET 1 OF 1

EDBC2M0250SP

1.1 jwen 2025/09/22 10:18