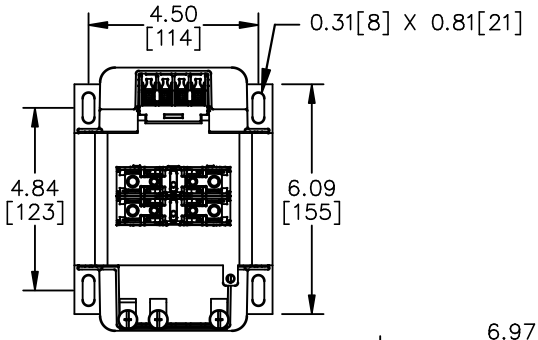


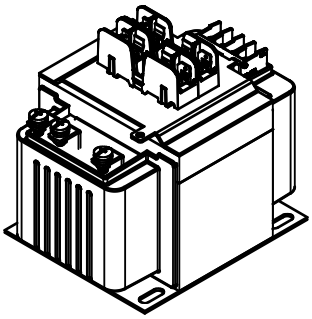

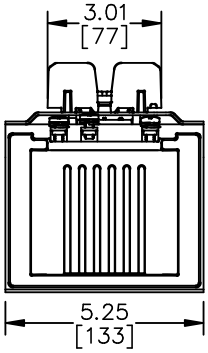


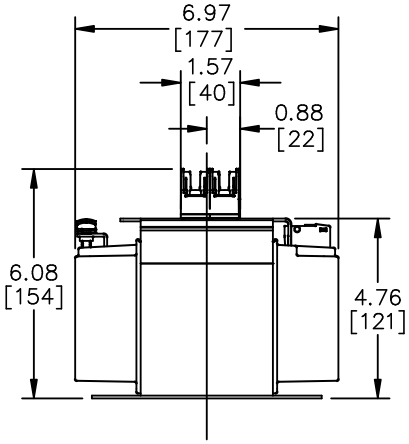


- FINGER GUARDS FOR TERMINAL BLOCKS AND FUSING OPTIONAL
- OPTIONAL FUSE BLOCK FINGER GUARD WILL ADD 0.2"[5mm] TO HEIGHT
- OPTIONAL TERMINAL BLOCK FINGER GUARD WILL ADD 0.38"[10mm] TO DEPTH
- TOLERANCES STD. +/- 0.1"[+/-3mm]
- ALL DIMENSIONS ARE IN INCHES [mm]
- ACCOUNT FOR REASONABLE SPACE FOR 240mm LONG FLEXIBLE WIRE AND CONNECTORS ON TERMINALS FROM TERMINAL BLOCKS TO FUSE BLOCKS

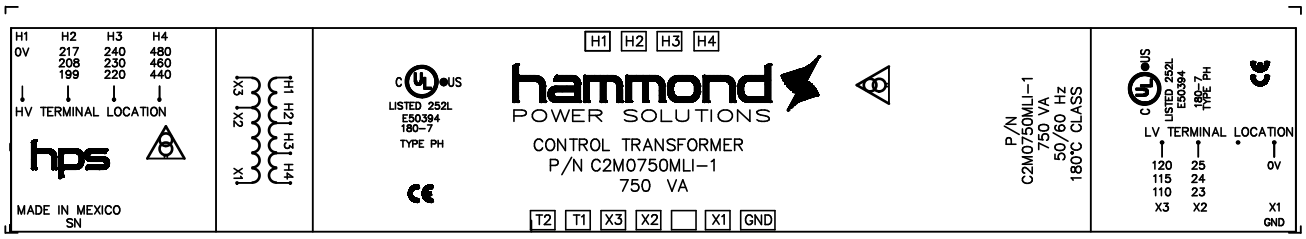


NOTES:

THIS DRAWING CONTAINS STRICKLY CONFIDENTIAL INFORMATION BELONGING TO HAMMOND POWER SOLUTIONS AND MUST NOT BE DISTRIBUTED OUTSIDE AUTHORIZED PARTIES.

hammond POWER SOLUTIONS

TITLE: 1 PHASE MOLDED CONTROL TFX

| NO. | DATE | BY | REVISION |
|---|---|---|---|

DES: RHARISH
DATE: 25/10/22
SCALE: NTS

SHEET 1 OF 1

EDBC2M0750MLI-1

0.1 rharish 2025/10/24 09:00