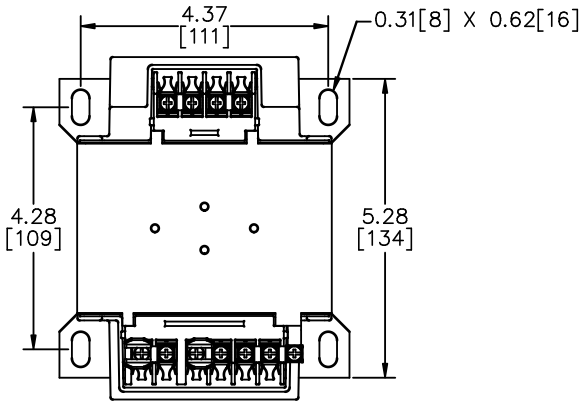

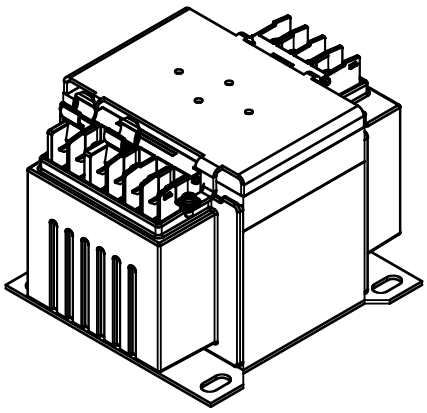

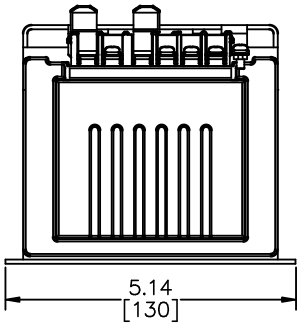

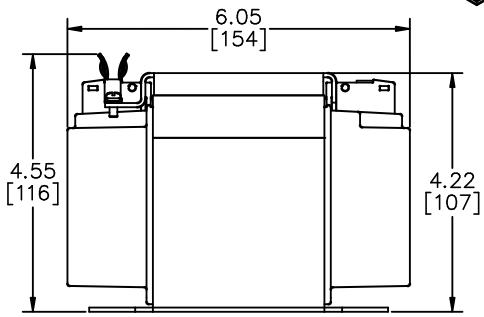

- FINGER GUARDS FOR TERMINAL BLOCKS AND FUSING OPTIONAL
- OPTIONAL FINGER GUARDS WILL ADD 0.1"[3mm] TO HEIGHT
- OPTIONAL FUSE BLOCK WILL ADD 1.3"[33mm] TO HEIGHT
- OPTIONAL FUSE BLOCK WITH FINGER GUARD WILL ADD ADD 1.5"[38mm] TO HEIGHT
- TOLERANCES STD. +/- 0.1"[+/-3mm]
- ALL DIMENSIONS ARE IN INCHES [mm]

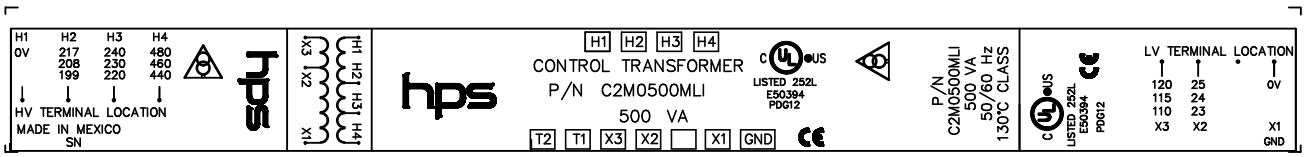

NOTES:

hammond POWER SOLUTIONS

				DES: MSARAF
				DATE: 25/06/30
NO.	DATE	BY	REVISION	SCALE: NTS

TITLE: 1 PHASE MOLDED CONTROL TFX

SHEET 1 OF 1

EDBC2M0500MLI

0.1 rharish 2025/07/08 15:11