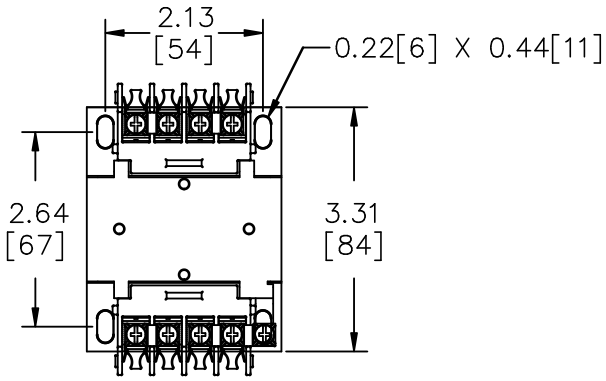


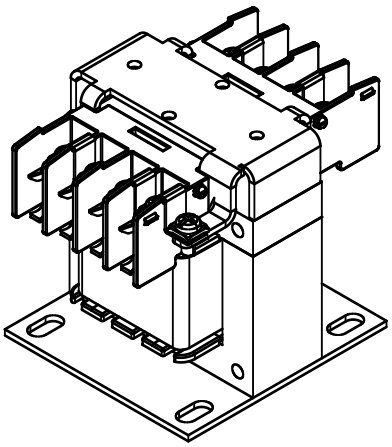

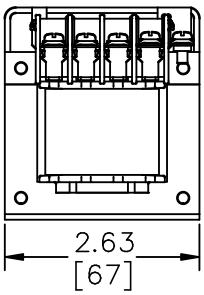


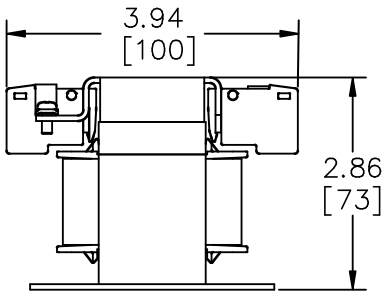


- FINGER GUARDS OPTIONAL
- OPTIONAL FUSE BLOCK WILL ADD 1.3"[33mm] TO HEIGHT
- TOLERANCES STD. +/- 0.1"[+/-3mm]
- ALL DIMENSIONS ARE IN INCHES [mm]

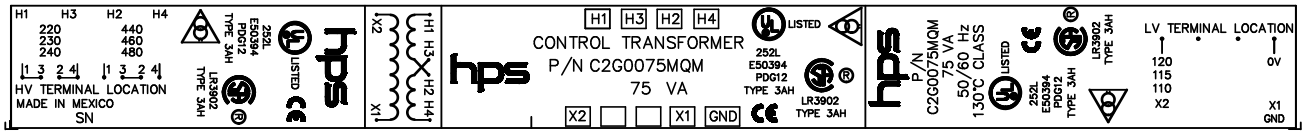


NOTES:

THIS DRAWING CONTAINS STRICKLY CONFIDENTIAL INFORMATION BELONGING TO HAMMOND POWER SOLUTIONS AND MUST NOT BE DISTRIBUTED OUTSIDE AUTHORIZED PARTIES.

hammond POWER SOLUTIONS

TITLE: 1 PHASE GENERAL PURPOSE CONTROL TFX

| NO. | DATE | BY | REVISION |
|---|---|---|---|
| 1 | 25/09/16 | RH | UPDATED EDB |

DES: MSARAF
DATE: 25/06/30
SCALE: NTS

SHEET 1 OF 1

EDBC2G0075MQM

1.1 jwen 2025/09/22 10:24