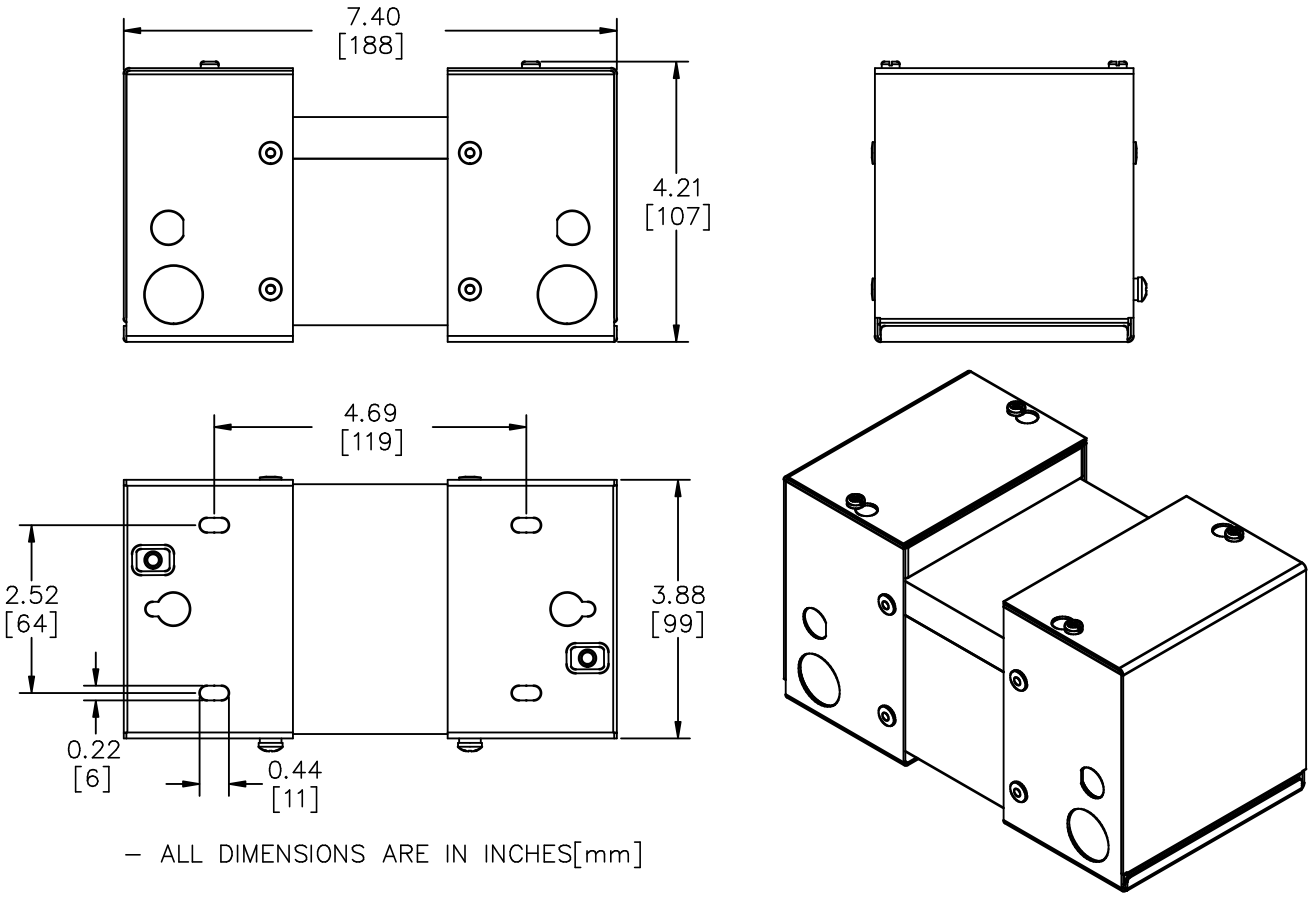

– ALL DIMENSIONS ARE IN INCHES[mm]

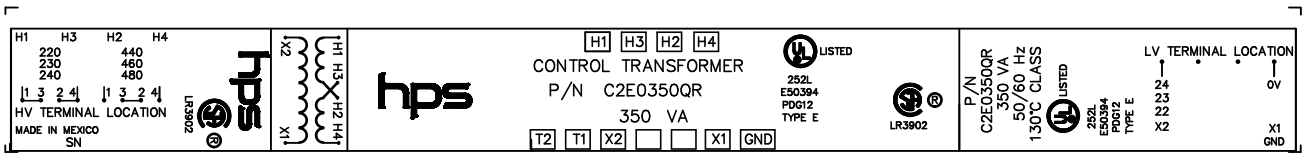

NOTES:

hammond POWER SOLUTIONS

TITLE: 1 PHASE ENCLOSED CONTROL TFX

NO.	DATE	BY	REVISION

DES: MSARAF
DATE: 25/06/30
SCALE: NTS

SHEET 1 OF 1

EDBC2E0350QR

0.1 rharish 2025/07/10 23:45