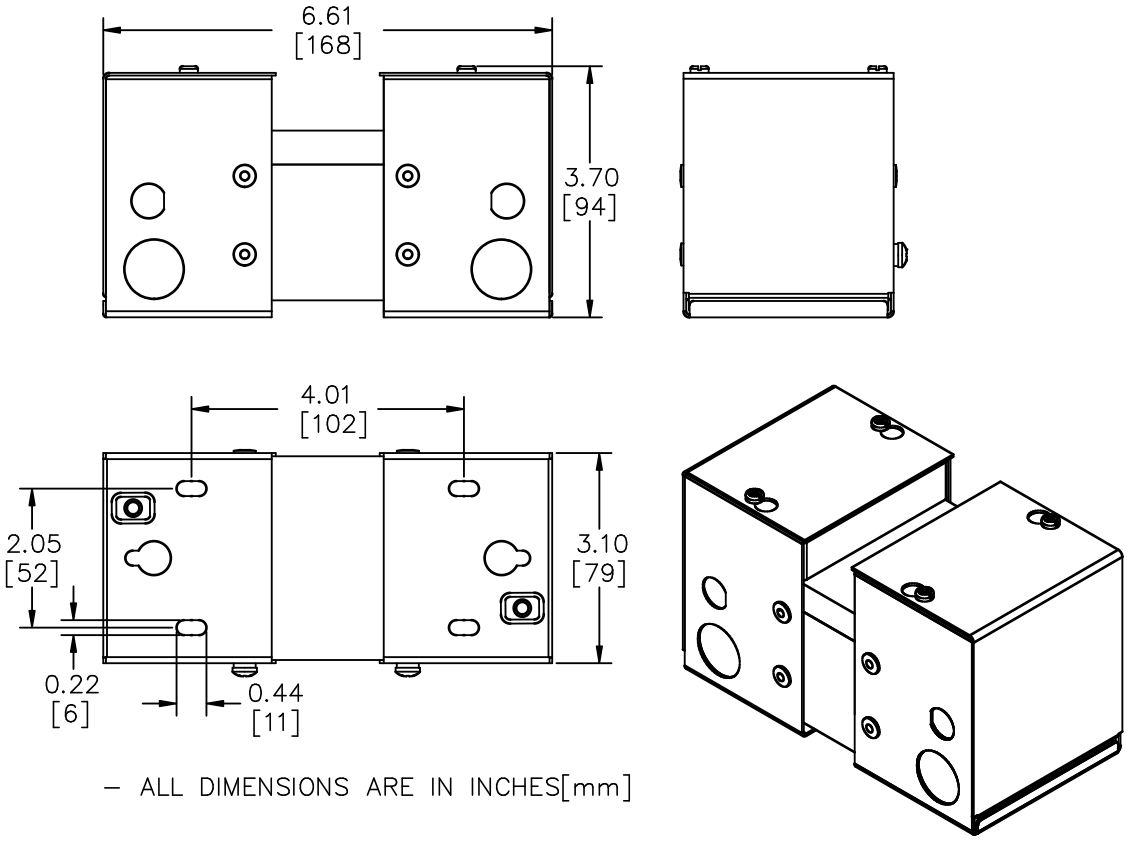

– ALL DIMENSIONS ARE IN INCHES[mm]

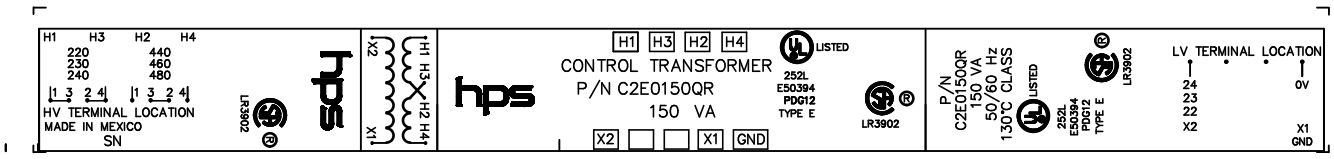

NOTES:

THIS DRAWING CONTAINS STRICKLY CONFIDENTIAL INFORMATION BELONGING TO HAMMOND POWER SOLUTIONS AND MUST NOT BE DISTRIBUTED OUTSIDE AUTHORIZED PARTIES.

hammond POWER SOLUTIONS

TITLE: 1 PHASE ENCLOSED CONTROL TFX

NO.	DATE	BY	REVISION
1	25/09/16	RH	UPDATED EDB

DES: MSARAF
DATE: 25/06/30
SCALE: NTS

SHEET 1 OF 1

EDBC2E0150QR

1.1 jwen 2025/09/22 10:35