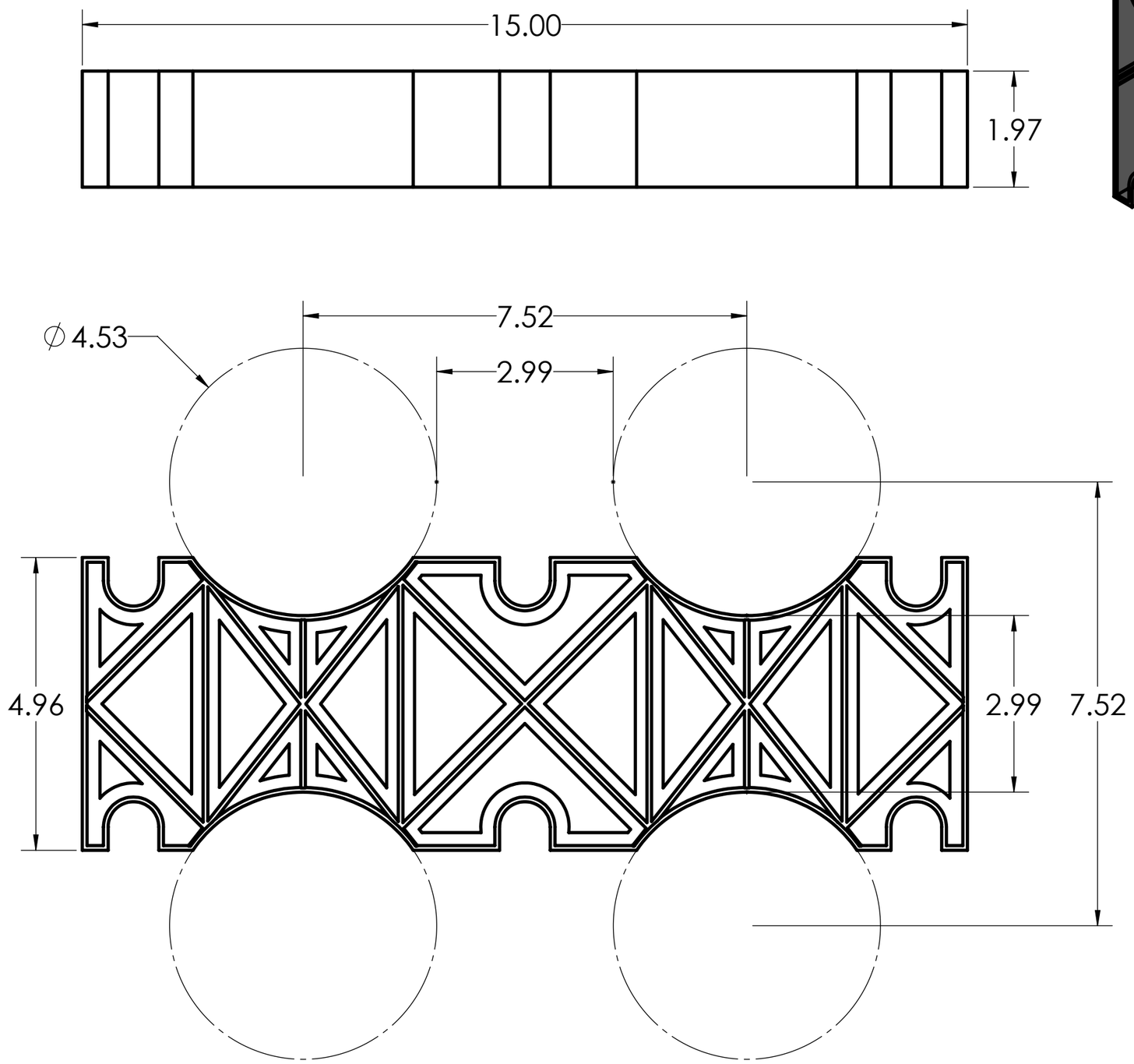

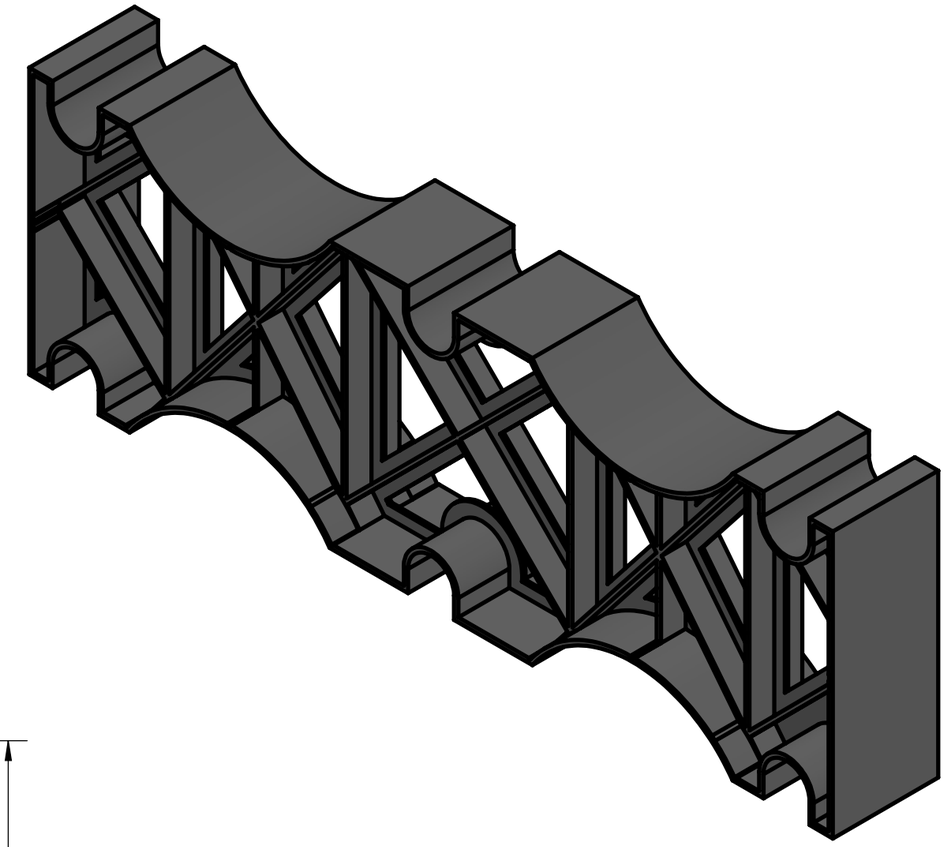

DIMENSIONS SHOWN ARE FOR REFERENCE AND ARE SUBJECT TO CHANGE WITHOUT NOTICE

IPEX Technologies Inc.

PART DESCRIPTION

029469 4"x3"x3"x4" PE 2 WAY DUCT SPACER MONOBLOC

PRODUCT CODE:	*UNIT: INCHES UNLESS DUAL DIMENSION: INCH [METRIC]*	*SCALE:*
029469		NTS

DRAWN: J.C.