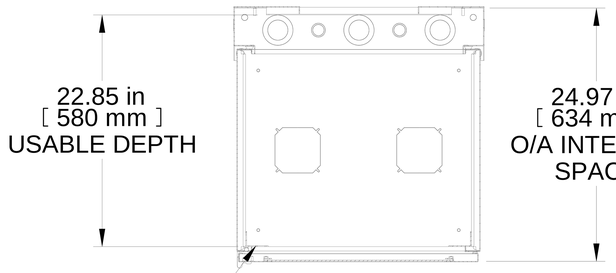

SECTION A-A

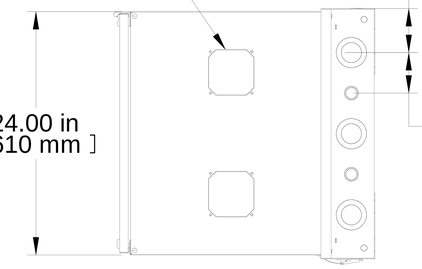

TOP VIEW

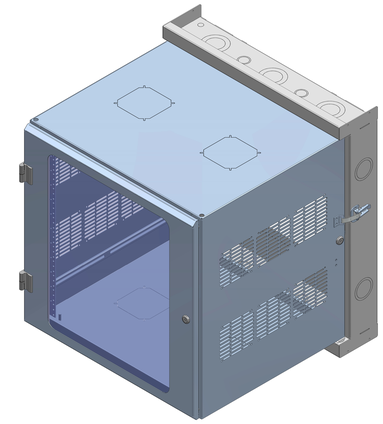

ISOMETRIC

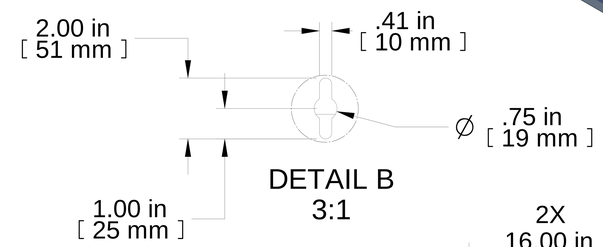

DETAIL B
3:1

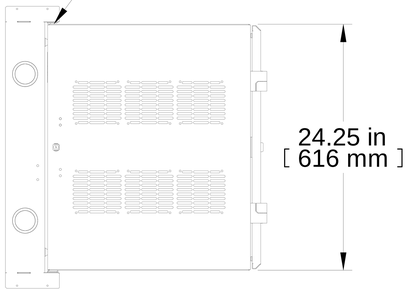

L.S. VIEW

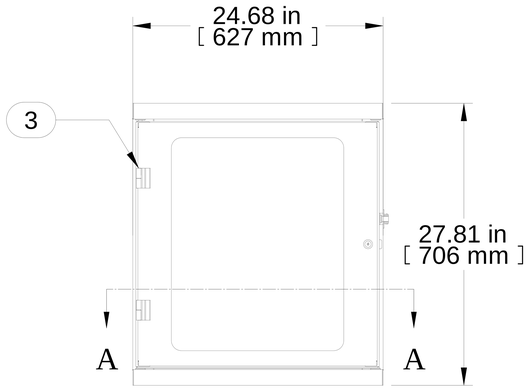

FRONT VIEW

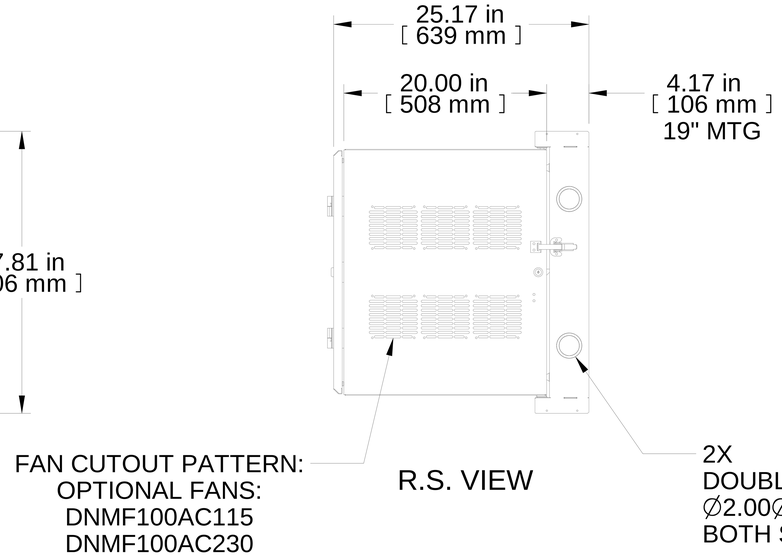

R.S. VIEW

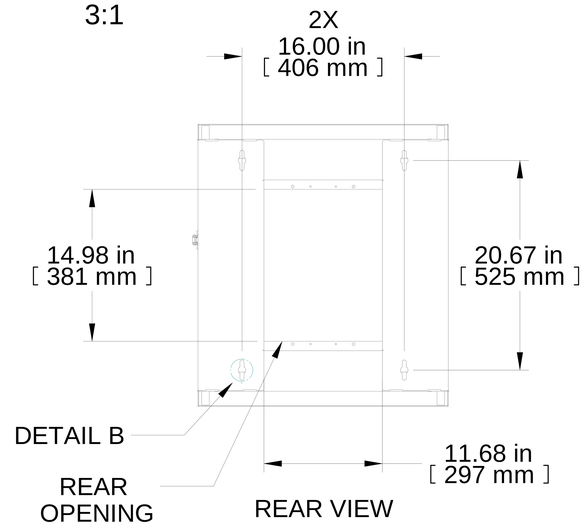

REAR VIEW

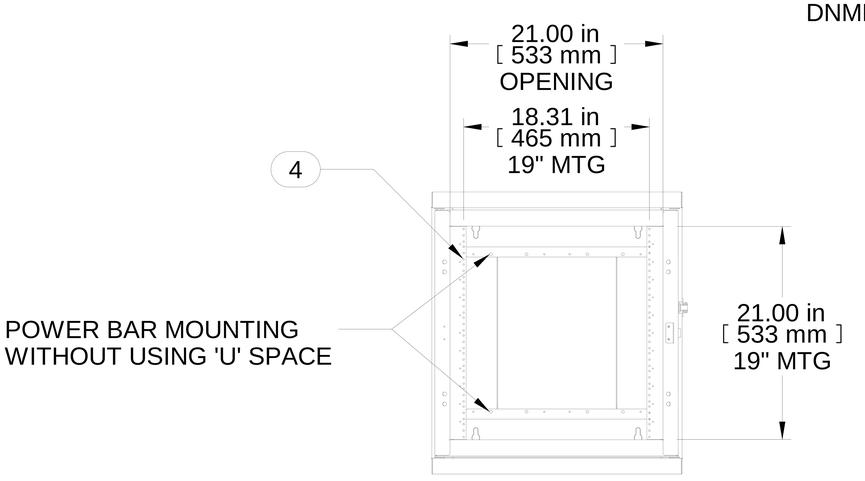

FRONT VIEW
DOOR REMOVED

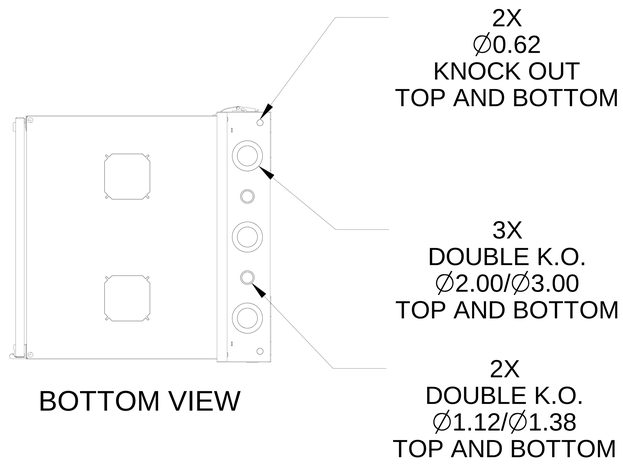

BOTTOM VIEW

Item Number	Title	Quantity
1	HWM REAR SECTION 24W 12U	1
2	HWM - CENTRE SECTION	1
3	HWM - WINDOW DOOR ASSY (12U)	1
4	19" TAPPED PANEL RAILS (PAIR)	1

PART NUMBERS

HWM2412U20WDBK	PAINTED BLANK TEXTURED WINDOW DOOR

NOTES

See Hammond Website for Additional Accessories

Français

Pour tous les détails sur nos produits,
svp veuillez consulter notre site www.hammondmfg.com

Data subject to change without notice. Isometric drawing not to scale.
Les données sont sujettes à changement sans préavis.

HAMMOND MANUFACTURING®

www.hammondmfg.com

PART NO. HWM2412U20WDBK