INSTALLATION GUIDE

SWT1/SWT2 SERIES

LINE VOLTAGE ELECTRIC HEATER THERMOSTAT

FEATURES

The STELPRO single (SWT1) and double pole (SWT2) wall thermostats are easy to use and complement every decor.

TECHNICAL SPECIFICATIONS

Approvals:

c UL us

Electrical:

120-277 VAC (22 A), 1/2 HP

Operating Range:

From frost-free mode ❄ to 32 °C (from ❄ to 90 °F)

Temperature sensor:

Bimetal

INSTALLATION

Warning: The installation of the thermostat should be performed by qualified personnel and must comply with the applicable local and national electrical codes and utility requirements. All wire connections must be tightened and properly arranged to prevent a short-circuit.

The unit must be installed directly into a 2 in x 4 in vertical outlet box.

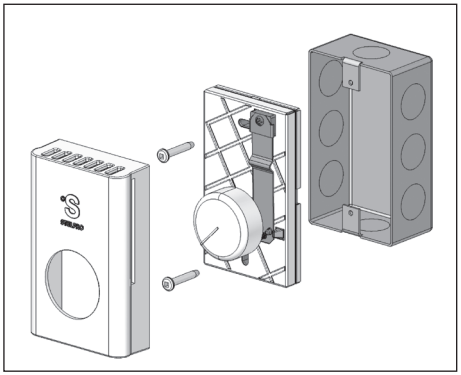

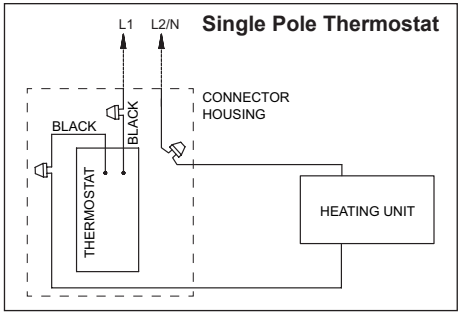

SINGLE POLE THERMOSTAT (SWT1)

1. Turn off the power at the electrical panel to prevent electrical shock or product damage;
2. Run the electrical supply and heating unit cable to the thermostat;
3. Connect one of the black wires from the thermostat to L1 line of the electrical panel;
4. Connect the other black wire from the thermostat to one of the wires of the heating unit cable;
5. Connect L2 (or Neutral) line to the remaining wire of the heating unit cable;
6. Secure the ground wires to the ground screw of the outlet box;
7. Ensure that all connections are properly tightened;
8. Insert wires into the outlet box;
9. Manually remove the thermostat cover.
10. Mount the thermostat base into the wall box and secure it using two mounting screws. Do not over-tighten.
11. Replace the thermostat cover.

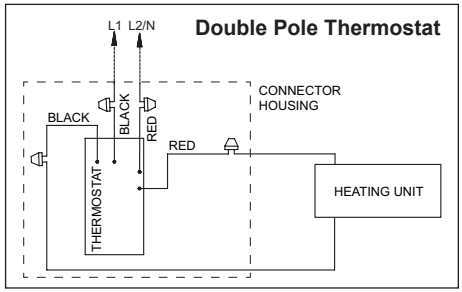

DOUBLE POLE THERMOSTAT (SWT2)

1. Turn off the power at the electrical panel to prevent electrical shock or product damage;
2. Run the electrical supply and heating unit cable to the thermostat;
3. a) Connect one of the black wires from the thermostat to one of the wires of the heating unit;
   b) Connect one of the red wires from the thermostat to the other wire of the heating unit;
4. a) Connect the other red wire from the thermostat to one of the wires of the electrical panel;
   b) Connect the other black wire from the thermostat to the other wire of the electrical panel;
5. Ensure that all connections are tightened;
6. Insert wires into the outlet box;
7. Secure the ground wire to the ground screw of the outlet box;
8. Manually remove the thermostat cover.
9. Mount the thermostat base into the wall box and secure it using two mounting screws. Do not over-tighten.
10. Replace the thermostat cover.

OPERATION

To adjust the temperature, turn the thermostat knob clockwise all the way to turn on the heater. When the room reaches the desired temperature, turn the thermostat knob counter-clockwise until you hear a click sound. Leave the knob in this position to maintain the room temperature at this setting. For additional heat, turn the knob clockwise until you hear the click sound again and the heater will turn on.

For single pole models: Turning the knob fully counter-clockwise will set the temperature to frost-free mode ❄.

For double pole models: Turning the knob fully counter-clockwise (until you hear a click) will disconnect the power to the heater.

LIMITED WARRANTY LIMITED WARRANTY LIMITED

LIMITED WARRANTY

This unit has a 1-year warranty. If at any time during this period the unit becomes defective, it must be returned to its place of purchase with the invoice copy, or simply contact our customer service department (with an invoice copy in hand). In order for the warranty to be valid, the unit must have been installed and used according to instructions. If the installer or the user modifies the unit, he will be held responsible for any damage resulting from this modification. The warranty is limited to the factory repair or the replacement of the unit, and does not cover the cost of disconnection, transport, and installation.

Customer service

Stelpro Design inc.
1041, Parent Street
St-Bruno (Quebec)
Canada J3V 6L7
E-mail: contact@stelpro.com
Web site: www.stelpro.com