CJ-series EtherNet/IP Unit

CJ1W-EIP21

CSM_CJ1W-EIP21_DS_E_7_1

Introducing the New EtherNet/IP Unit. More Than 180,000 Words of Tag Data Link Capacity!

- EtherNet/IP is an industrial multivendor network that uses Ethernet. Managed by the ODVA (Open DeviceNet Vendors Association), it has open standards and is used with a wide range of industrial devices.
- The EtherNet/IP Unit supports tag data links to enable sharing data between devices at Ethernet nodes and a message service for sending and receiving data when required.
- The EtherNet/IP Unit supports the same FINS/UDP and FINS/TCP functionality as Ethernet Units.



CJ1W-EIP21

EtherNet/IP conformance tested

Features

- Large-capacity tag data links are easily enabled by simply setting connections, with no programming required.
- Tag data links can be used to exchange data with up to 256 nodes over up to 256 connections.
- Up to 256 connections can be set per Unit with up to 722 words of data per connection, for a total of up to 184,832 words of link data. (There is no limit to the data link capacity for the overall network.)
- Data concurrency is maintained within each connection (for up to 722 words).
- Tag data link settings can be changed for individual Units even while tag data links are being used on a network.
- Errors can be diagnosed using the Network Configurator, and system errors can be monitored with a wide array of status flags.

System Configuration

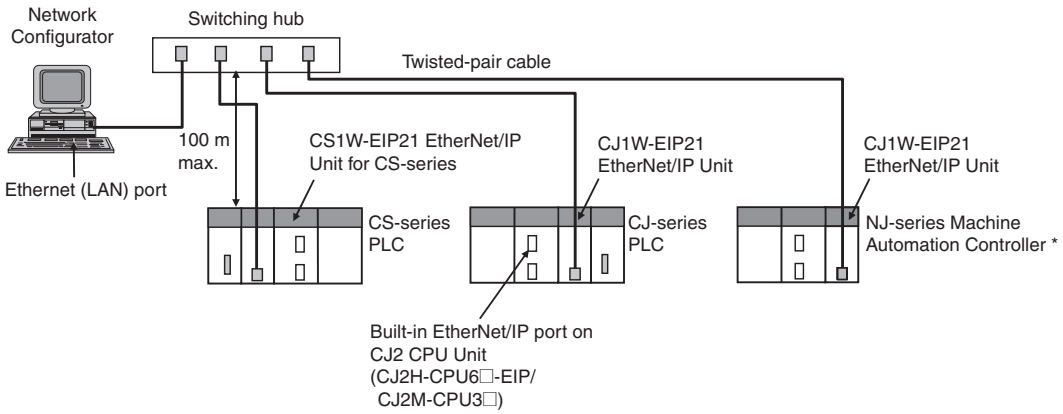

* EtherNet/IP Unit with unit version 2.1 or later is required to connect C1JW-EIP21 to NJ-series CPU Unit. Use CPU Unit with version 1.01 or later and Sysmac Studio with version 1.02 or later.

Ordering Information

International Standards

- The standards are abbreviated as follows: U: UL, U1: UL (Class I Division 2 Products for Hazardous Locations), C: CSA, UC: cULus, UC1: cULus (Class I Division 2 Products for Hazardous Locations), CU: cUL, N: NK, L: Lloyd, and CE: EC Directives.
- Contact your OMRON representative for further details and applicable conditions for these standards.

EtherNet/IP Unit

Unit type	Product name	Specifications			No. of unit numbers allocated	Current consumption (A)		Model	Standards
		Communications cable	Communications functions	Units per CPU Unit		5 V system	24 V system		
CJ1 CPU Bus Unit	EtherNet/IP Unit 	Shielded twisted-pair (STP) cable Categories: 100 Ω at 5, 5e	Tag Data Link Functions, Message Communications Functions	8 max. *1	1	0.41	–	**CJ1W-EIP21 *2**	UC1, N, L, CE

*1. Up to four EtherNet/IP Units can be connected to a NJ CPU Unit. Up to seven EtherNet/IP Units can be connected to a CJ2H-CPU6□-EIP. Up to two EtherNet/IP Units can be connected to a CJ2M CPU Unit.
*2. EtherNet/IP Unit with unit version 2.1 or later is required to connect C1JW-EIP21 to NJ-series CPU Unit. Use CPU Unit with version 1.01 or later and Sysmac Studio with version 1.02 or later.

Industrial Switching Hubs

Product name	Appearance	Specifications			Accessories	Current consumption (A)	Model	Standards
		Functions	No. of ports	Failure detection				
Industrial Switching Hubs		Quality of Service (QoS): EtherNet/IP control data priority Failure detection: Broadcast storm and LSI error detection 10/100BASE-TX, Auto-Negotiation	3	No	• Power supply connector	0.22	**W4S1-03B**	UC, CE
			5	No		0.22	**W4S1-05B**	
			5	Yes	• Power supply connector • Connector for informing error	0.22	**W4S1-05C**	CE

Recommended Network Devices

The following table shows the devices recommended for use with the EtherNet/IP.

Part	Manufacturer	Model number	Inquires
Switching Hub	Phoenix Contact	FL SWITCH SFN 8TX (8 ports)	Phoenix Contact USA Customer Service
	Contec USA, Inc.	SH8008(FIT)H (8 ports)	CONTEC USA Inc.
	Cisco Systems, Inc.	WS-C2955T-12 (12 ports)	Cisco Systems, Inc. Main Corporate HQ
Twisted-pair cable	**100BASE-TX**		
	Fujikura	F-LINK-E 0.5mm × 4P	Fujikura America, Inc.
	EtherNet/IP compliant cable		–
Connectors (Modular plug)	**STP Plug**		
	Panduit Corporation	MPS588	Panduit Corporation US Headquarters
Boots	Tsuko Company	MK boot (IV) LB	Tsuko Company Japan Headquarters

Note: 1. Always use a switching hub when using tag data links in the network.
2. If a repeater hub is used for EtherNet/IP tag data links (cyclic communications), the network's communications load will increase, data collisions will occur frequently, and stable communications will be impossible.

Mountable Racks

Model		NJ system		CJ1 system		CP1H system	NSJ system	
		CPU Rack	Expansion Rack	CPU Rack	Expansion Backplane	CP1H PLC	NSJ Controller	Expansion Backplane
CJ1W-EIP21	Unit version 2.0	4 Units (per CPU Unit) *1		8 Units (per CPU Unit) *2		2 Units *3	Not supported	8 Units

*1. EtherNet/IP Unit with unit version 2.1 or later is required to connect C1JW-EIP21 to NJ-series CPU Unit. Use CPU Unit with version 1.01 or later and Sysmac Studio with version 1.02 or later.
*2. Up to seven EtherNet/IP Units can be connected to a CJ2H-CPU6□-EIP. Up to two EtherNet/IP Units can be connected to a CJ2M CPU Unit.
*3. A CP1W-EXT01 CJ Unit Adaptor is required.

Sysmac® is a trademark or registered trademark of OMRON Corporation in Japan and other countries for OMRON factory automation products.
Windows are either registered trademarks or trademarks of Microsoft Corporation in the United States and/or other countries.
Other company names and product names in this document are the trademarks or registered trademarks of their respective companies.

EtherNet/IP Units Specifications

Item		Specifications
Model number		CJ1W-EIP21
Type		100Base-TX *1
Applicable PLCs		NJ-series, CJ (CJ1, CJ2) series, CP1H, and NSJ series PLCs.
Unit classification		CJ-series CPU Bus Unit
Mounting location		CPU Rack or Expansion Rack
Number of Units that can be mounted		NJ-series System : 4 max. (including Expansion Racks) CJ series System and NSJ series System: 8 max. (including Expansion Racks) *2 CP1H System: 2 max.
CPU Unit words used	**Allocated CIO Area words (CPU Bus Unit words)**	25 words/Unit (one unit number's words)
		These words contain control bits and flags, the target node PLC's operating and error information, Unit status, communications status, registered/normal target node information, and FINS/TCP connection status.
	Allocated DM Area words (CPU Bus Unit words)	100 words/Unit (one unit number's words)
		These words contain the IP address display/setting area.
	User-set area	Any usable data area words
		Target node PLC's operating and error information, and registered/normal target node information
	CPU Bus Unit System Setup	Not used.
Non-volatile memory within EtherNet/IP Unit (See note.)		The following settings are stored in the EtherNet/IP Unit's non-volatile memory. **Note:** Unlike the regular Ethernet Units, the CPU Bus Unit Setup Area in the CPU Unit is not used for these settings. 1. Unit Setup (communications settings for the EtherNet/IP Unit, such as the IP address, DNS server settings, host name, baud rate, FINS/UDP settings, and FINS/TCP settings) 2. Tag data link settings (device parameters)
Transfer specifications	**Media access method**	CSMA/CD
	Modulation method	Baseband
	Transmission paths	Star form
	Baud rate	100 Mbit/s (100Base-TX)
	Transmission media	Shielded twisted-pair (STP) cable Categories: 100 Ω at 5, 5e
	Transmission distance	100 m (distance between hub and node)
	Number of cascade connections	There is no limitation when a switching hub is used.
Current consumption (Unit)		410 mA max. at 5 V DC
Weight		94 g max.
Dimensions		31 × 90 × 65 mm (W × H × D)
Other general specifications		Other specifications conform to the general specifications of the CJ-series.

*1. If tag data links are being used, use 100Base-TX. Otherwise, 10Base-T can be used, but this is not recommended.
*2. Up to seven EtherNet/IP Units can be connected to a CJ2H-CPU6□-EIP. Up to two EtherNet/IP Units can be connected to a CJ2M CPU Unit.