M-8370

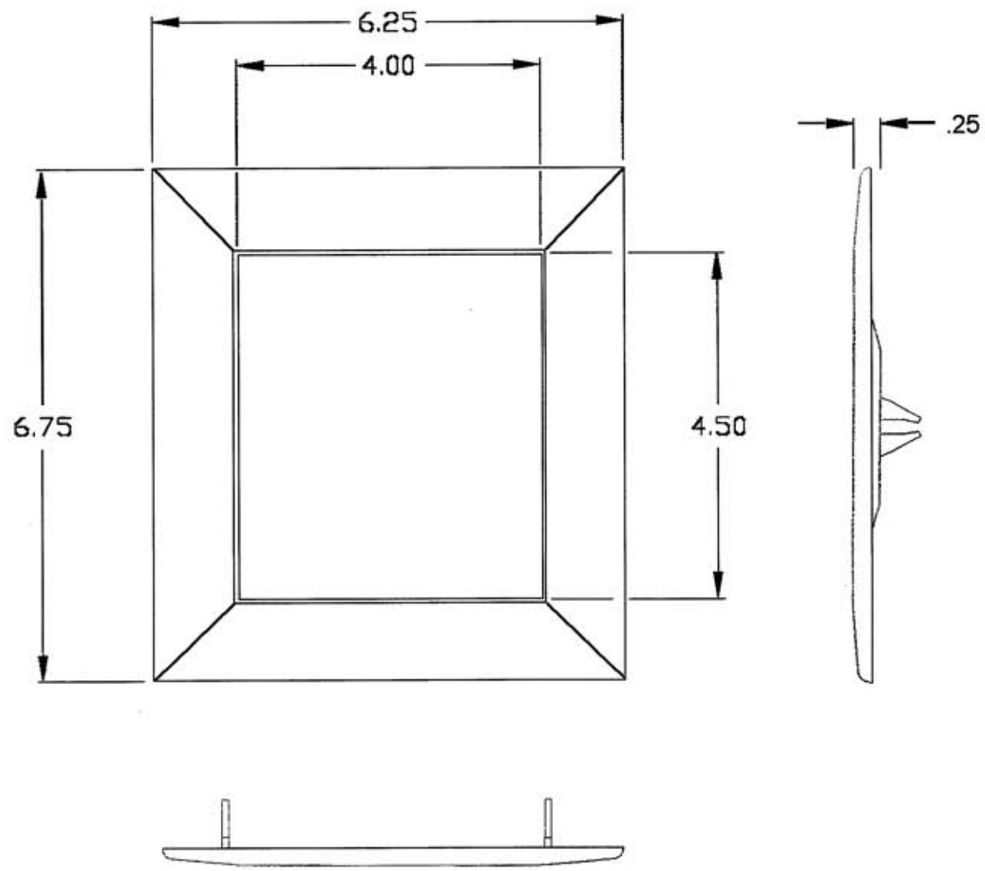

NOTE

1. USE WITH RECESSED WALL BOX CAT. HBLWSCS2 DWG. M8368
2. MARKINGS ; U.L. , C.S.A. ,HUBBELL .
3. MATERIAL = PVC

CATALOG NUMBER	COLOR
HBLTRIM2WBK	BLACK
HBLTRIM2WGY	GRAY
HBLTRIM2WI	IVORY
HBLTRIM2WWA	WHITE

LIST OF PARTS

DESCRIPTION	MATERIAL	FINISH

SYM	REVISIONS	DATE
2	ADD NOTE 1, 2, 3, WAS TRIM PLATE NOW WALL FLANGE DCN8322 GPK / JD	1 / 31 / 01
1	RELEASE FOR PRODUCTION DCN7953 GPK/JD JVD	9/6/00

THE DESIGN AND DIMENSIONS OF THE PRODUCT SHOWN ON THIS DRAWING ARE SUBJECT TO CHANGE WITHOUT NOTICE

TITLE WALL FLANGE 2 GANG (WIDE)

TOLERANCES UNLESS OTHERWISE SPECIFIED
FRACTIONS ±1/64
DECIMALS ±.005
ANGLES ±2°

WIRING DEVICE-KELLEMS
HUBBELL INCORPORATED
BRIDGEPORT, CT

DR. BY GPK	APP. BY JVD
TR. BY JVD	SCALE .5"=1"
CHK'D BY J.D.	DATE 9/6/00

DIMENSION SHEET FOR CAT. NO.

REPAIRABLE ☐ NON-REPAIRABLE ☐

B

M-8370

CODE 74545