M-13131 | 2

CAT. NO	COLOR FINISH	CONFIG NO.	MATL.
NPS8BK	BLACK	008	POLYCARBONATE
NPS8	BROWN	008	POLYCARBONATE
NPS8GY	GRAY	008	POLYCARBONATE
NPS8I	IVORY	008	POLYCARBONATE
NPS8LA	LIGHT ALMOND	008	POLYCARBONATE
NPS8W	WHITE	008	POLYCARBONATE
NPS1BK	BLACK	001	POLYCARBONATE
NPS1	BROWN	001	POLYCARBONATE
NPS1GY	GRAY	001	POLYCARBONATE
NPS1I	IVORY	001	POLYCARBONATE
NPS1LA	LIGHT ALMOND	001	POLYCARBONATE
NPS1W	WHITE	001	POLYCARBONATE
NPS26BK	BLACK	026	POLYCARBONATE
NPS26	BROWN	026	POLYCARBONATE
NPS26GY	GRAY	026	POLYCARBONATE
NPS26I	IVORY	026	POLYCARBONATE
NPS26LA	LIGHT ALMOND	026	POLYCARBONATE
NPS26W	WHITE	026	POLYCARBONATE

NOTES :
1. INCHES [MM]
2. ALL PLATES HAVE COME WITH SUB-PLATE MOUNTING SCREWS.
3. SEE PAGE TWO FOR CONFIGURATION DIMENSIONS

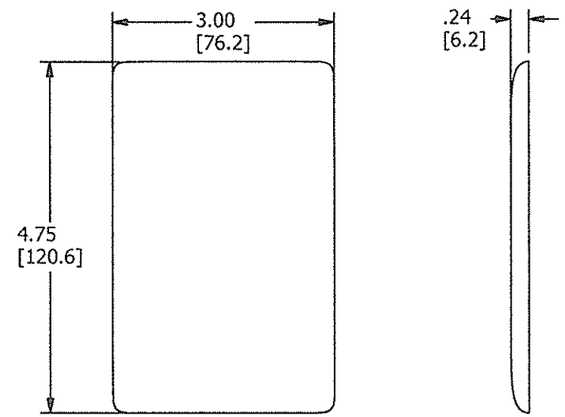

1 GANG PLATE BASIC
OUTSIDE DIMENSIONS

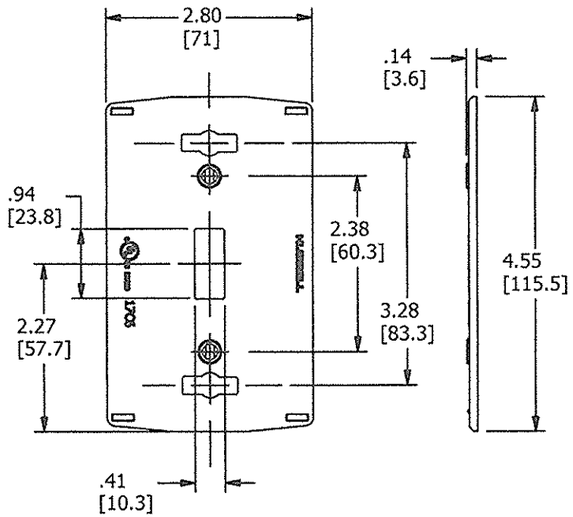

TOGGLE SWITCH PLATE
SUB-PLATE

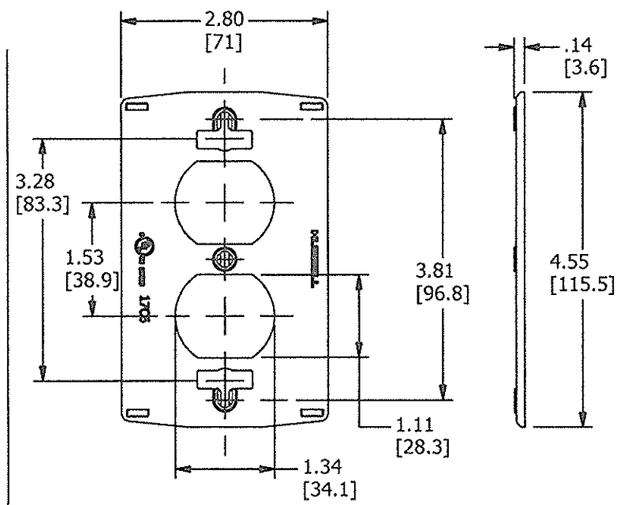

DUPLEX RECEPTACLE
SUB-PLATE

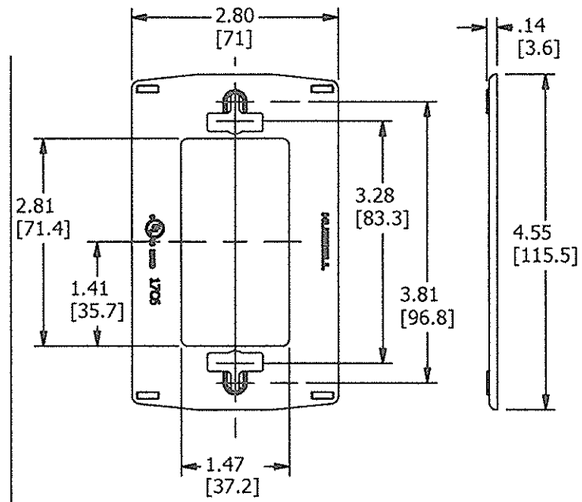

GFI/RECTANGLUAR OPENING
SUB-PLATE

LIST OF PARTS

DESCRIPTION	MATERIAL	FINISH
SNAP-ON WALL PLATE	POLYCARBONATE	
SUB PLATE	POLYCARBONATE	
SCREWS	STEEL	

SYM	DESCRIPTION	APPROVED	DATE
2	UPDATED DIMENSIONS PER DCN 22631	DMP	9/23/20 16
1	RELEASED FOR PRODUCTION PER DCN 21776	DMP	11-5-15

THE DESIGN AND DIMENSIONS OF THE PRODUCT SHOWN ON THIS DRAWING ARE SUBJECT TO CHANGE WITHOUT NOTICE

TITLE
1 GANG SNAP-ON SCREWLESS WALLPLATES

TOLERANCES UNLESS OTHERWISE SPECIFIED
FRACTIONS ±1/64
DECIMALS ±.005
ANGLES ±2°

WIRING DEVICE-KELLEMS
HUBBELL INCORPORATED
SHELTON, CT

DR. BY D.PECK	APP. BY
TR. BY D.PECK	SCALE NTS
CHK'D BY	DATE 11/4/2015

DIMENSION SHEET FOR CAT. NO.
REPAIRABLE ☐ NON-REPAIRABLE ☒
B
M-13131
2

CODE 74545