M-14339 | 1

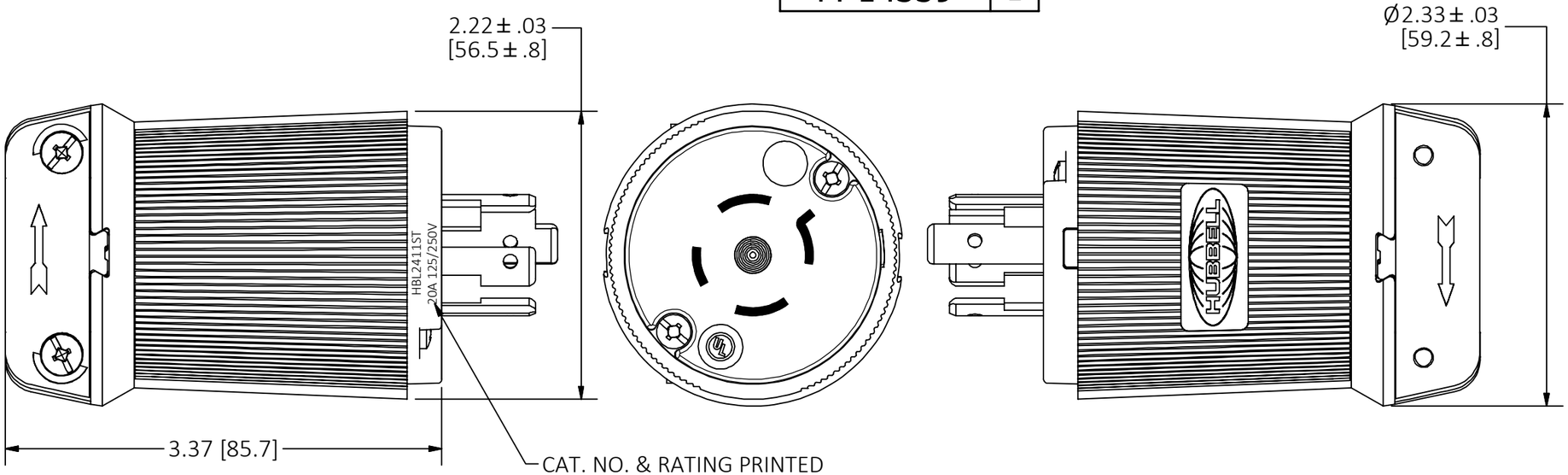

NEMA NO.	RATING	POLE/WIRE	CAT. NO.	BLADE CONFIGURATION	VOLTAGE COLOR CODE
L14-20P	125/250V	3P/4W GROUNDING	HBL2411ST	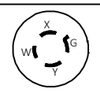	ORANGE
L15-20P	3Ø 250VAC	3P/4W GROUNDING	HBL2421ST	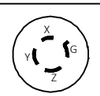	BLUE
L16-20P	3Ø 480VAC	3P/4W GROUNDING	HBL2431ST	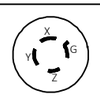	RED
L21-20P	3Ø Y 120/208VAC	4P/5W GROUNDING	HBL2511ST	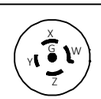	BLUE
L22-20P	3Ø Y 277/480VAC	4P/5W GROUNDING	HBL2521ST		RED

NOTES (UNLESS OTHERWISE SPECIFIED):

1. DIMENSIONS ARE IN INCHES [mm].
2. ALL DEVICES ARE cULus LISTED & FED SPEC.
3. CORD TYPES: S & SJ
4. CORD CLAMP RANGE: 0.35 [9 mm] - 0.60 [15 mm].
5. WIRING TERMINAL ACCOMMODATION: 14 AWG - 8 AWG STRANDED COPPER WIRE ONLY.
6. ASSEMBLY SCREWS ARE PHILLIPS/SLOTTED/ROBERTSON HEAD.
7. CATALOG NUMBERS & RATING ARE PAD PRINTED ON THE SIDE OF THE DEVICE, COLOR CODED BY VOLTAGE.

LIST OF PARTS

DESCRIPTION	MATERIAL	FINISH
COVER	NYLON	BLACK
CORD CLAMP	NYLON	NATURAL
BLADE HOLDER	NYLON	NATURAL
RETAINER	NYLON	BLACK
BLADE	COPPER ALLOY	
SPRING	STAINLESS STEEL	
PLUNGER	NYLON	
ASSEMBLY FASTENERS	STEEL	ZINC PLATE
CORD CLAMP INSERTS	NYLON	BLACK
DUST SHIELD	TPE	BLACK

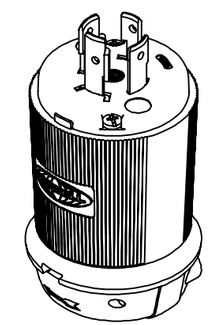

CAT. NO. HBL2411ST
(NOT SHOWN TO SCALE)

REV	DESCRIPTION	APP	DATE
1	INITIAL RELEASE PER DCN 211202014898 PS	MAM	11/30/21

THE DESIGN AND DIMENSIONS OF THE PRODUCT SHOWN ON THIS DRAWING ARE SUBJECT TO CHANGE WITHOUT NOTICE. DIMENSIONS ARE IN INCHES [mm].

TITLE

20A 4 & 5-WIRE SPRING TERMINATED PLUGS

WIRING DEVICE-KELLEMS
HUBBELL INCORPORATED
SHELTON, CT

TOLERANCES UNLESS OTHERWISE SPECIFIED
.XX = ± .01
.XXX= ± .005
ANGLE TOL. ±2°

DR. BY	PS	SCALE	1 : 1
CHK. BY	MAM	DATE	11/17/21

DIMENSION SHEET FOR CAT. NO.
HBL2411ST, HBL2421ST, HBL2431ST, HBL2511ST, HBL2521ST

B

M-14339

1

CAGE CODE 74545