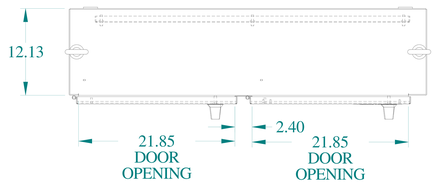

TOP VIEW

ISOMETRIC VIEWS

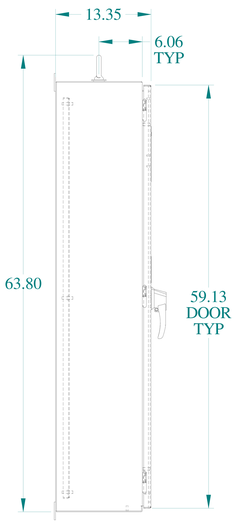

SIDE VIEW

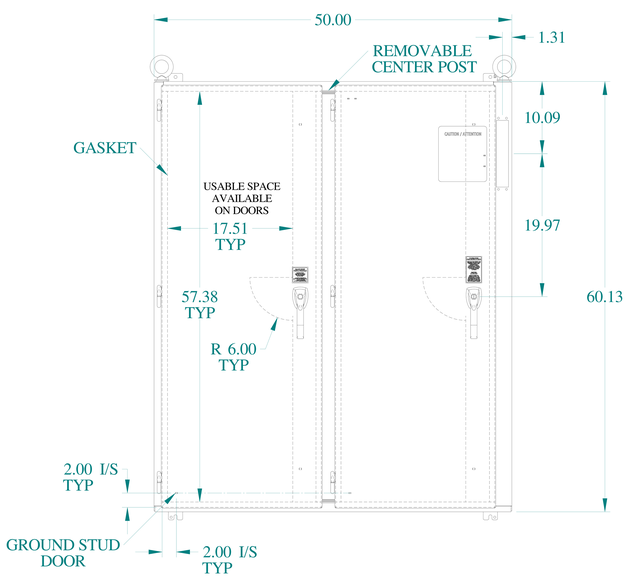

FRONT VIEW

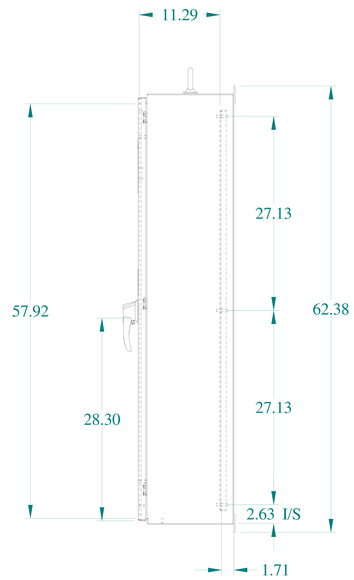

SIDE VIEW

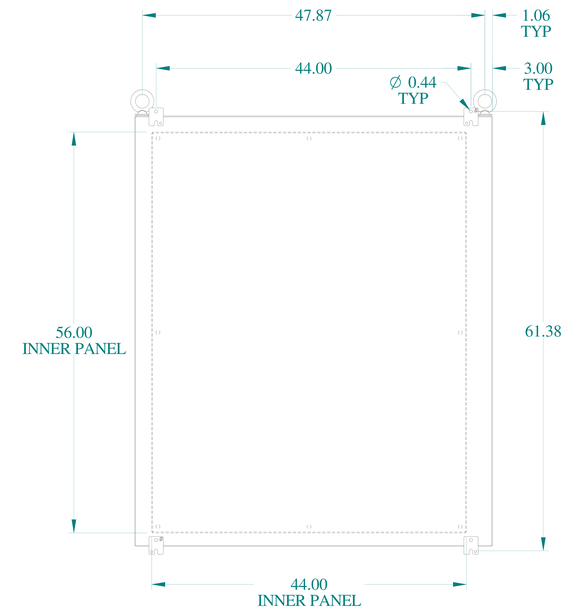

BACK VIEW

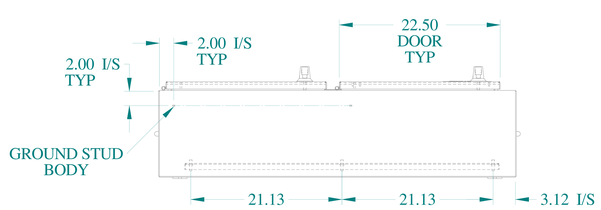

BOTTOM VIEW

HAMMOND MANUFACTURING®

www.hammondmfg.com

Data subject to change without notice.

Part # : 2UD605012FTC	Date : Mar. 23, 2019

Link:www.hammfg.com/2UD605012FTC