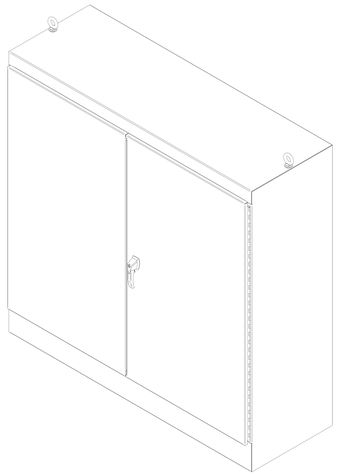

ISOMETRIC VIEWS

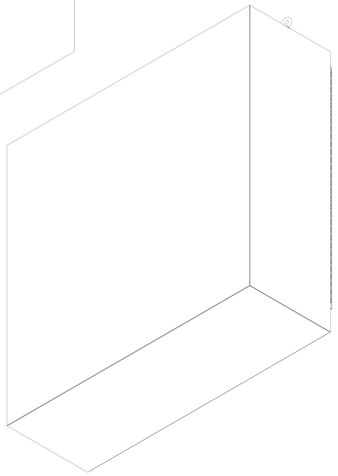

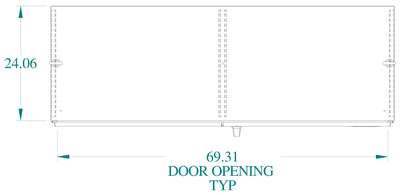

TOP VIEW

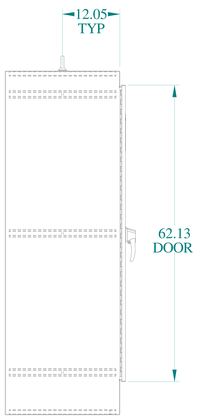

SIDE VIEW

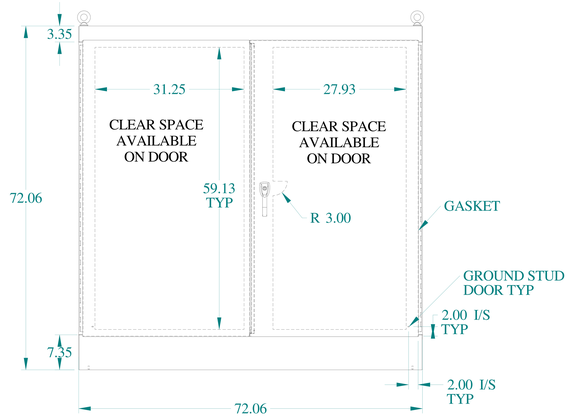

FRONT VIEW

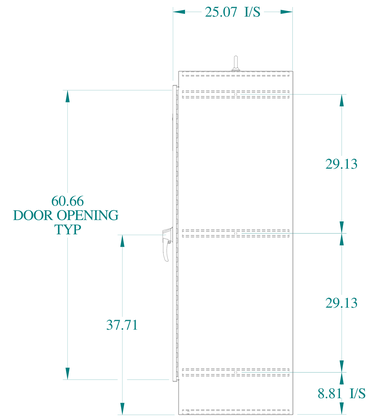

SIDE VIEW

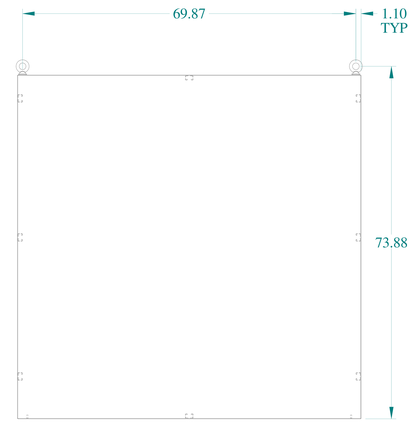

BACK VIEW

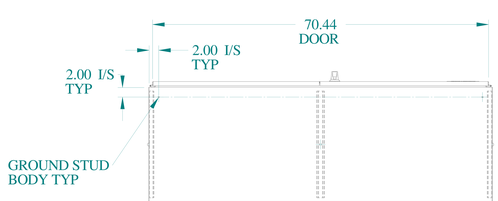

BOTTOM VIEW

HAMMOND MANUFACTURING®

www.hammondmfg.com

Data subject to change without notice.

Part # : 1418ZY24	Date : Apr. 1, 2019

Link:www.hammfg.com/1418ZY24