S3Z

DATALOGIC

ADVANCED GLOBAL STYLE MINIATURE PHOTOELECTIC SENSOR

- 50-250 mm background suppression
- 0.7 m proximity, 150 mm with narrow beam
- 4 m polarized retroreflective
- 15 m through beam
- Light and dark trimmer models
- Standard 3-wire output configuration

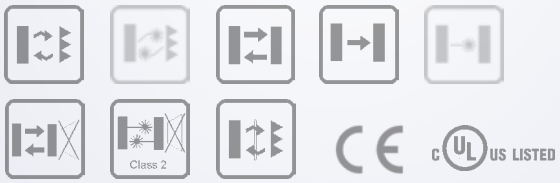

APPLICATIONS

- Processing and Packaging machinery
- Electronics assembling
- Transportation lines, material handling
- Automatic warehouses
- Cosmetics and Pharmaceutical industry
- Small part detection with maximum accuracy

S3Z		
Through beam		0...15 m 0...30 m (class 1 LASER)
Polarized retroreflective		0.05...4 m 0,3...10 m (class 1 LASER)
Retroreflective for transparent (on R2 reflector)		0...2 m
Diffuse proximity		0...700 mm
		50...150 mm (narrow beam)
Background suppression		50...250 mm 40...300 mm (class 1 LASER)
Power supply	Vdc	10...30 V
	Vac	
	Vac/dc	
Output	PNP	•
	NPN	•
	NPN/PNP	
	relay	
	other	
Connection	cable	•
	connector	•
	pig-tail	
Approximate dimensions (mm)		11x31x19
Housing material		PC/PBT
Mechanical protection		IP67

MODEL SELECTION AND ORDER INFORMATION

OPTIC FUNCTION	EMISSION	CONNECTION	OUTPUT	MODEL	ORDER NO.
Narrow beam diffuse proximity	LED	2 m Cable	PNP - LIGHT	S3Z-PR-2-C01-PL	95B010040
		M8 Connector	PNP - LIGHT	S3Z-PR-5-C01-PL	95B010050
		2 m Cable	PNP - DARK	S3Z-PR-2-C01-PD	95B010060
		M8 Connector	PNP - DARK	S3Z-PR-5-C01-PD	95B010070
		2 m Cable	NPN - LIGHT	S3Z-PR-2-C01-NL	95B010200
		M8 Connector	NPN - LIGHT	S3Z-PR-5-C01-NL	95B010210
		2 m Cable	NPN - DARK	S3Z-PR-2-C01-ND	95B010220
		M8 Connector	NPN - DARK	S3Z-PR-5-C01-ND	95B010230
		2 m Cable	PNP - LIGHT/DARK	S3Z-PR-2-C01-PP	95B010670
		M8 Connector	PNP - LIGHT/DARK	S3Z-PR-5-C01-PP	95B010690
		2 m Cable	NPN - LIGHT/DARK	S3Z-PR-2-C01-NN	95B010660
		M8 Connector	NPN - LIGHT/DARK	S3Z-PR-5-C01-NN	95B010680
Long diffuse proximity	LED	2 m Cable	PNP - LIGHT	S3Z-PR-2-C11-PL	95B010001
		M8 Connector	PNP - LIGHT	S3Z-PR-5-C11-PL	95B010011
		2 m Cable	PNP - DARK	S3Z-PR-2-C11-PD	95B010021
		M8 Connector	PNP - DARK	S3Z-PR-5-C11-PD	95B010031
		2 m Cable	NPN - LIGHT	S3Z-PR-2-C11-NL	95B010161
		M8 Connector	NPN - LIGHT	S3Z-PR-5-C11-NL	95B010171
		2 m Cable	NPN - DARK	S3Z-PR-2-C11-ND	95B010181
		M8 Connector	NPN - DARK	S3Z-PR-5-C11-ND	95B010191
		2 m Cable	PNP - LIGHT/DARK	S3Z-PR-2-C11-PP	95B010630
		M8 Connector	PNP - LIGHT/DARK	S3Z-PR-5-C11-PP	95B010650
		2 m Cable	NPN - LIGHT/DARK	S3Z-PR-2-C11-NN	95B010620
		M8 Connector	NPN - LIGHT/DARK	S3Z-PR-5-C11-NN	95B010640
Polarized retroreflective	LED	2 m Cable	PNP - LIGHT	S3Z-PR-2-B01-PL	95B010081
		M8 Connector	PNP - LIGHT	S3Z-PR-5-B01-PL	95B010091
		2 m Cable	PNP - DARK	S3Z-PR-2-B01-PD	95B010101
		M8 Connector	PNP - DARK	S3Z-PR-5-B01-PD	95B010111
		2 m Cable	NPN - LIGHT	S3Z-PR-2-B01-NL	95B010241
		M8 Connector	NPN - LIGHT	S3Z-PR-5-B01-NL	95B010251
		2 m Cable	NPN - DARK	S3Z-PR-2-B01-ND	95B010261
		M8 Connector	NPN - DARK	S3Z-PR-5-B01-ND	95B010271
		2 m Cable	PNP - LIGHT/DARK	S3Z-PR-2-B01-PP	95B010590
		M8 Connector	PNP - LIGHT/DARK	S3Z-PR-5-B01-PP	95B010610
		2 m Cable	NPN - LIGHT/DARK	S3Z-PR-2-B01-NN	95B010580
		M8 Connector	NPN - LIGHT/DARK	S3Z-PR-5-B01-NN	95B010600
	LASER	2 m Cable	PNP - LIGHT/DARK	S3Z-PH-2-B01-P	95B010440
		M8 Connector	PNP - LIGHT/DARK	S3Z-PH-5-B01-P	95B010460
		2 m Cable	NPN - LIGHT/DARK	S3Z-PH-2-B01-N	95B010450
		M8 Connector	NPN - LIGHT/DARK	S3Z-PH-5-B01-N	95B010470
Through beam	LED	2 m Cable	PNP - LIGHT	S3Z-PR-2-FG01-PL	95B010121
		M8 Connector	PNP - LIGHT	S3Z-PR-5-FG01-PL	95B010131
		2 m Cable	PNP - DARK	S3Z-PR-2-FG01-PD	95B010141
		M8 Connector	PNP - DARK	S3Z-PR-5-FG01-PD	95B010151
		2 m Cable	NPN - LIGHT	S3Z-PR-2-FG01-NL	95B010281
		M8 Connector	NPN - LIGHT	S3Z-PR-5-FG01-NL	95B010291
		2 m Cable	NPN - DARK	S3Z-PR-2-FG01-ND	95B010301
		M8 Connector	NPN - DARK	S3Z-PR-5-FG01-ND	95B010311
		2 m Cable	PNP - LIGHT/DARK	S3Z-PR-2-FG01-PP	95B010710
		M8 Connector	PNP - LIGHT/DARK	S3Z-PR-5-FG01-PP	95B010730
		2 m Cable	NPN - LIGHT/DARK	S3Z-PR-2-FG01-NN	95B010700
		M8 Connector	NPN - LIGHT/DARK	S3Z-PR-5-FG01-NN	95B010720
	LASER	2 m Cable	PNP - LIGHT/DARK	S3Z-PH-2-FG01-P	95B010520
		M8 Connector	PNP - LIGHT/DARK	S3Z-PH-5-FG01-P	95B010540
		2 m Cable	NPN - LIGHT/DARK	S3Z-PH-2-FG01-N	95B010530
		M8 Connector	NPN - LIGHT/DARK	S3Z-PH-5-FG01-N	95B010550
Background suPression	LED	2 m Cable	PNP - LIGHT	S3Z-PR-2-M01-PL	95B010331
		M8 Connector	PNP - LIGHT	S3Z-PR-5-M01-PL	95B010351
		2 m Cable	NPN - LIGHT	S3Z-PR-2-M01-NL	95B010321
		M8 Connector	NPN - LIGHT	S3Z-PR-5-M01-NL	95B010341
		2 m Cable	PNP - LIGHT/DARK	S3Z-PR-2-M01-PP	95B010750
		M8 Connector	PNP - LIGHT/DARK	S3Z-PR-5-M01-PP	95B010770
		2 m Cable	NPN - LIGHT/DARK	S3Z-PR-2-M01-NN	95B010740
		M8 Connector	NPN - LIGHT/DARK	S3Z-PR-5-M01-NN	95B010760
	LASER	2 m Cable	PNP - LIGHT/DARK	S3Z-PH-2-M01-P	95B010480
		M8 Connector	PNP - LIGHT/DARK	S3Z-PH-5-M01-P	95B010500
		2 m Cable	NPN - LIGHT/DARK	S3Z-PH-2-M01-N	95B010490
		M8 Connector	NPN - LIGHT/DARK	S3Z-PH-5-M01-N	95B010510
Polarized retroreflective for transparent	LED	2 m Cable	NPN - DARK	S3Z-PR-2-T51-ND	95B010390
		2 m Cable	PNP - DARK	S3Z-PR-2-T51-PD	95B010380
		M8 Connector	NPN - DARK	S3Z-PR-5-T51-ND	95B010370
		M8 Connector	PNP - DARK	S3Z-PR-5-T51-PD	95B010360

ACCESSORIES

ST-505

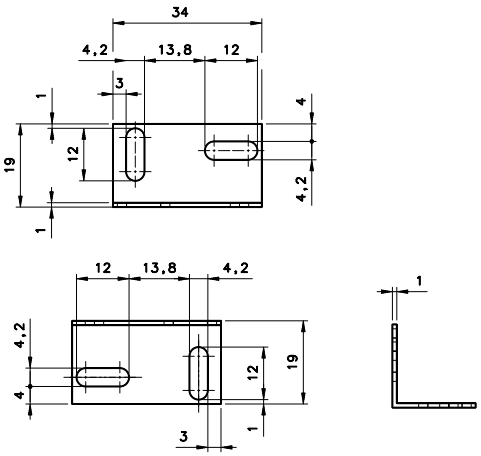

ST-5039

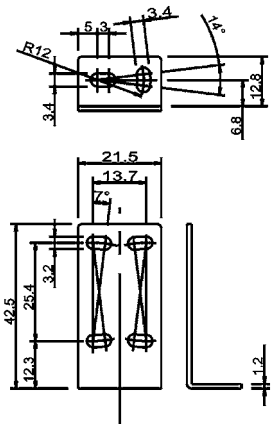

ST-5046

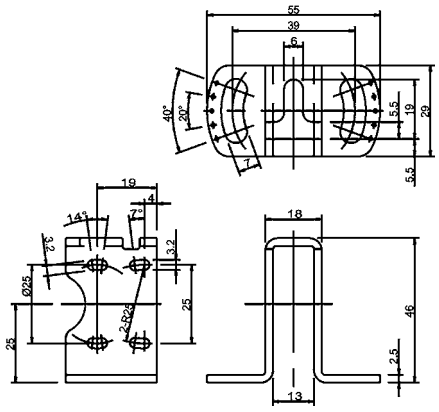

ST-5040

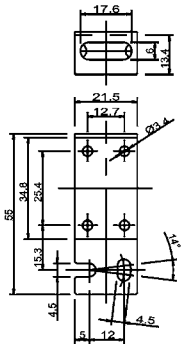

SLIT

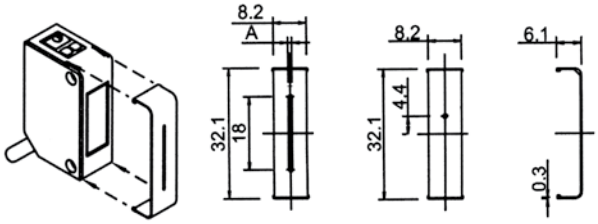

M18 ADAPTER NOSE

MODEL SELECTION AND ORDER INFORMATION

MODEL	DESCRIPTION	ORDER NO.
ST-505	lateral mounting	95ACC2800
ST-5039	L-shaped fixing bracket	95ACC2270
ST-5040	protection bracket with vertical fixing (only for cable versions)	95ACC2280
ST-5046	protection bracket with horizontal fixing	95ACC2370
S3Z-SLIT1	Ø 0,5 mm slit for through beam	95ACC2470
S3Z-SLIT2	Ø 1 mm slit for through beam	95ACC2480
S3Z-SLIT3	Ø 2 mm slit for through beam	95ACC2490
S3Z-SLIT4	0,5x18 mm slit for through beam	95ACC2500
S3Z-SLIT5	1x18 mm slit for through beam	95ACC2510
S3Z-SLIT6	2x18 mm slit for through beam	95ACC2520
ST-S3Z-M18	S3Z FIX BRK M18 THREADED NOSE	95ACC7850

CABLES

TYPE	DESCRIPTION	LENGTH	MODEL	ORDER No.
Axial M8 Connector	4-pole, grey, P.V.C.	3 m	CS-B1-02-G-03	95A251420
		5 m	CS-B1-02-G-05	95A251430
		7 m	CS-B1-02-G-07	95A251440
		10 m	CS-B1-02-G-10	95A251480
	4-pole, P.U.R.	2 m	CS-B1-02-R-02	95A251620
		5 m	CS-B1-02-R-05	95A251640
Radial M8 Connector	4-pole, grey, P.V.C.	3 m	CS-B2-02-G-03	95A251450
		5 m	CS-B2-02-G-05	95A251460
		7 m	CS-B2-02-G-07	95A251470
		10 m	CS-B2-02-G-10	95A251530
	4-pole, P.U.R.	2 m	CS-B2-02-R-02	95A251630
		5 m	CS-B2-02-R-05	95A251650

Rev. 03, 03/2019

DATALOGIC PRODUCT OFFERING

Sensors

Hand Held scanners

Mobile Computers

Laser Marking Systems

Safety Laser Scanner

Vision Systems

Stationary Industrial Scanners

Safety Light Curtains

The company endeavours to continuously improve and renew its products; for this reason the technical data and contents of this catalogue may undergo variations without prior notice. For correct installation and use, the company can guarantee only the data indicated in the instruction manual supplied with the products. Product and Company names and logos referenced may be either trademarks or registered trademarks of their respective companies. We reserve the right to make modifications and improvements.