S6

DATALOGIC

MULTIVOLTAGE 50X50 MM COMPACT SENSORS SERIES

- 50x50 mm compact dimensions
- Free voltage Vac/Vdc models with relay output
- 10-30 Vdc model with transistor output
- Standard cable or M12 4-pole connection

APPLICATIONS

- Automatic machines
- Packaging lines
- Transportation lines
- Automatic warehouses

CE c UL us LISTED
only Vcc models

S6		
Through beam		0...20 m
Retroreflective (on R2 reflector)		0,1...6 m
Polarized retroreflective (on R2 reflector)		0,1...5 m
Diffuse proximity		10...900 mm
		10...2000 mm
Background suppression		30...100 mm
		30...250 mm
		100...500 mm
Power supply	Vdc	10...30 V
	Vac	
	Vac/dc	15...264 Vac/Vdc
Output	PNP	•
	NPN	•
	NPN/PNP	•
	relay	•
	other	
Connection	cable	•
	connector	•
	pig-tail	
Approximate dimensions (mm)		18x50x50
Housing material		ABS
Mechanical protection		IP65

TECHNICAL DATA

Power supply	10 ... 30 Vdc limit values (mod. S6/S6T/S6R-5) 15 ... 264 Vac/Vdc (48 ... 60 Hz) limit values (mod. S6-1)
Ripple	2 Vpp max.
Consumption (output current excluded)	30 mA max. (mod. S6/S6T/S6R-5) 40 mA max. (mod. S6-1)
Light emission	IR LED 880 nm red LED 660 nm (mod. S6/S6R/S6T...B/M10)
Setting	sensivity trimmer (excl. mod. S6...G, S6R-5-M) adjustment screw (mod. S6/S6T/S6R-5-M)
Operating mode	LIGHT/DARK selection by cable or connector (mod. S6/S6T/S6R-5) LIGHT/DARK selection by N.O./N.C. output (mod. S6R-5-M) LIGHT/DARK selection by trimmer (mod. S6-1)
Indicators	red OUTPUT LED (excl. mod. S6...G), POWER LED (mod. S6...G) green STABILITY LED (mod. S6-5-M25)
Output	NPN/PNP (mod. S6) PNP (mod. S6T) NPN or PNP; NC; NO (mod. S6R) Relay 1 NO and NC contact 250 Vac, 30 Vdc min. applicable load 5 Vdc, 10 mA (mod. S6-1)
Output current	100 mA max., 3 A max. (mod. S6-1)
Saturation voltage	1,5 V max. (NPN/PNP output)
Response time	1 ms max. 2 ms max. (mod. S6/S6R/S6T...F/G) 30 ms max. (mod. S6-1)
Switching frequency	500 Hz 250 Hz max. (mod. S6/S6R/S6T...F/G) 16 Hz (mod. S6-1)
Connection	2 m cable – 6 mm (mod. S6-1), 2 m cable – 5 mm (mod. S6-5), M12 4-pole connector (mod. S6T-S6R)
Dielectric strength	500 Vac, 1 min between electronics and housing
Insulating resistance	>20 MΩ, 500 Vdc between electronics and housing
Electrical protection	class 2, class 1 (mod. S6-1)
Mechanical protection	IP65
Ambient light rejection	according to EN 60947-5-2
Vibrations	0,5 mm amplitude, 10 ... 55 Hz frequency, for every axis (EN60068-2-6)
Shock resistance	11 ms (30 G) 6 shock for every axis (EN60068-2-27)
Housing material	ABS UL 94V-0
Lens material	PMMA plastic
Operating temperature	-25 ... 55 °C
Storage temperature	-25 ... 70 °C
Weight	160 g max. cable vers., 40 g max. conn. vers.

DIMENSIONS

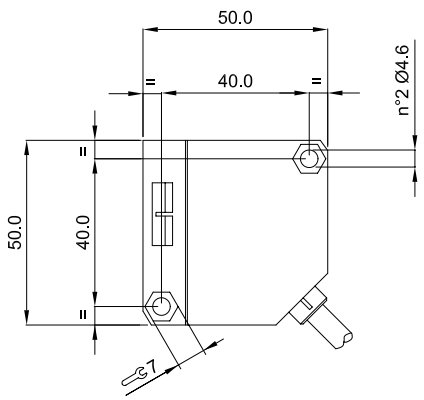

Background suppression

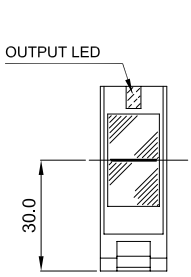

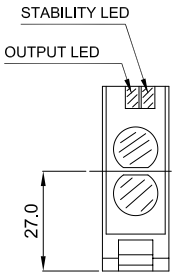

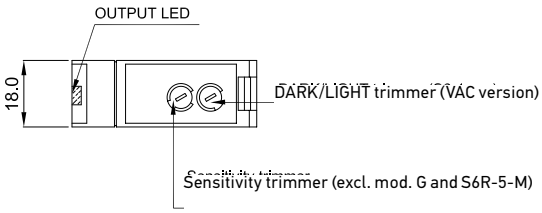

mm

M12 Connector

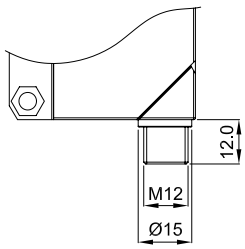

MODEL SELECTION AND ORDER INFORMATION

OPTIC FUNCTION	OPERATING	POWER SUPPLY	OUTPUT	MODEL	ORDER No.
Short diffuse proximity	10...900 mm	15...264 V A.C.	relay SPDT 250V/3A	S6-1-C90	S937530090
		10...30 V D.C.	NPN/PNP	S6-5-C90	S937530000
			PNP N.O./N.C.	S6R-5-C90-P	950201190
			PNP	S6T-5-C90-P	961031020
Long diffuse proximity	10...2000 mm	15...264 V A.C.	relay SPDT 250V/3A	S6-1-C200	950151140
		10...30 V D.C.	NPN/PNP	S6-5-C200	950201150
			PNP N.O./N.C.	S6R-5-C200-P	950201200
			NPN N.O./N.C.	S6R-5-C200-N	956101050
Retroreflective	0,1...6 m (on R2 reflector)	15...264 V A.C.	relay SPDT 250V/3A	S6-1-A6	S937330090
		10...30 V D.C.	NPN/PNP	S6-5-A6	S937330000
			PNP	S6T-5-A6-P	961031000
			PNP N.O./N.C.	S6R-5-A6-P	950201170
Polarized retroreflective	0,1...5 m (on R2 reflector)	15...264 V A.C.	relay SPDT 250V/3A	S6-1-B5	S937420090
		10...30 V D.C.	NPN/PNP	S6-5-B5	S937420000
			PNP N.O./N.C.	S6R-5-B5-P	950201180
			PNP	S6T-5-B5-P	961031010
Background suppression	30...100 mm	10...30 V D.C.	PNP N.O./N.C.	S6R-5-M10-P	950201230
	30...250 mm		NPN/PNP	S6-5-M25	S937830000
			PNP N.O./N.C.	S6R-5-M25-P	950201220
			NPN N.O./N.C.	S6R-5-M25-N	956101080
			PNP	S6T-5-M25-P	961041000
	100...500 mm		PNP N.O./N.C.	S6R-5-M50-P	950201250
Through beam (Receiver)	0...20 m	15...264 V A.C.	relay SPDT 250V/3A	S6-1-F20	S937200090
		10...30 V D.C.	NPN/PNP	S6-5-F20	S937200010
			PNP N.O./N.C.	S6R-5-F20-P	950201160
			PNP	S6T-5-F20-P	961211010
Through beam (Emitter)	-	15...264 V A.C.	-	S6-1-G20	S937130090
		10...30 V D.C.	-	S6-5-G20	S937130000
			-	S6T-5-G20	961211000

ACCESSORIES

ST-504

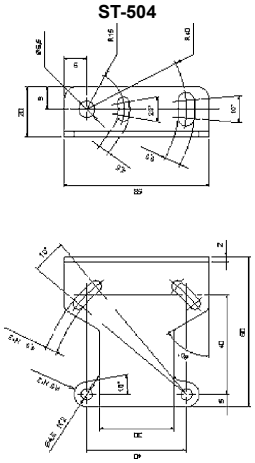

ST-5020

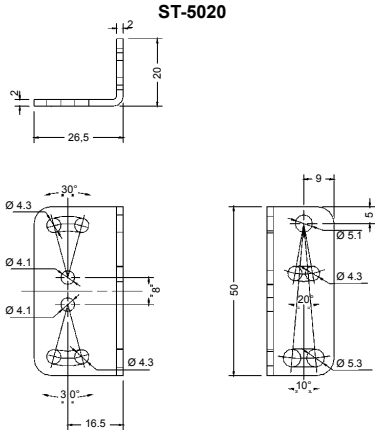

ST-5021

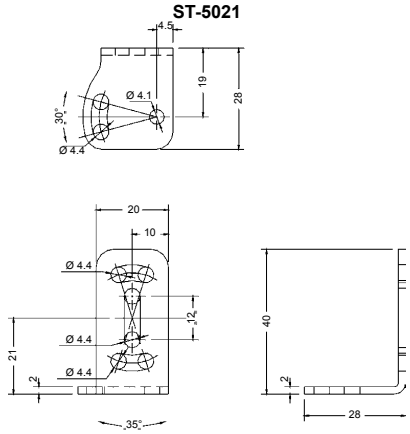

ST-5053

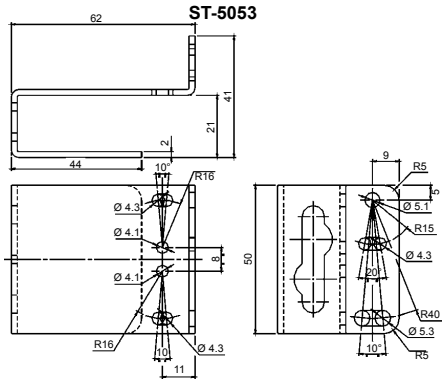
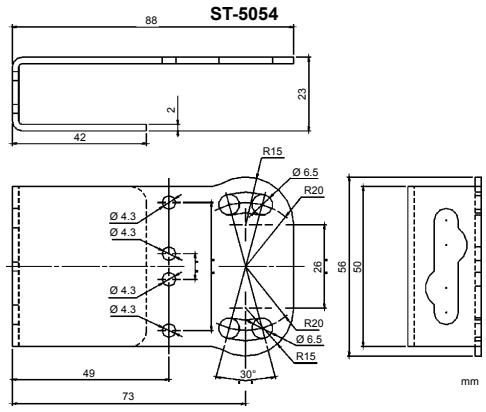
ST-5054